MicroBooNE

Mitch Soderberg
Yale University
June 3, 2008

Introduction

- MicroBooNE is a proposed Liquid Argon Time Projection Chamber (LArTPC) detector to sit in the Booster and off-axis NuMI beam on the surface at Fermilab.
- Combines timely physics with hardware R&D necessary for the evolution of LArTPCs.
  - Cold Electronics
  - Long Drift
  - MiniBooNE excess
  - Low-Energy Cross-Sections
  - etc...
- LArTPCs are an attractive detector technology due to excellent position/energy resolution.
- A massive (~100kTon) detector at a far location in an intense beam is the ultimate goal; What we learn from MicroBooNE will help us reach this goal.

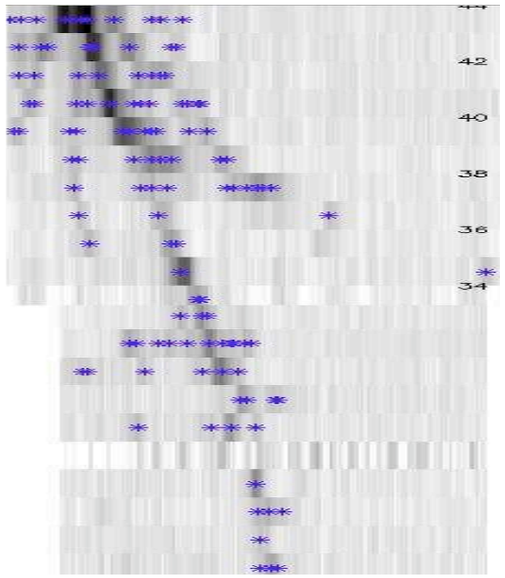

Yale TPC Event

MicroBooNE Collaboration

H. Chen, J. Farrell, F. Lanni, D. Lissauer, D. Makowiecki, J. Mead,

V. Radeka, S. Rescia, J. Sondericker, B. Yu

Brookhaven National Laboratory, Upton, NY

L. Bugel, J. M. Conrad, V. Nguyen, M. Shaevitz, W. Willis[‡]

Columbia University, New York, NY

C. James, S. Pordes, G. Rameika

Fermi National Accelerator Laboratory, Batavia, IL

C. Bromberg, D. Edmunds

Michigan State University, Lansing, MI

P. Nienaber

St. Mary's University of Minnesota, Winona, MN

S. Kopp, K. Lang

University of Texas at Austin, Austin, TX

C. Anderson, B. T. Fleming[†], S. Linden, M. Soderberg, J. Spitz

Yale University, New Haven, CT

[†]= Spokesperson, [‡]= Deputy Spokesperson

Design

- Cryostat (170 tons LAr) as large as can be commercially built offsite and delivered over the roads.
- Evacuable vessel with foam insulation.
- To sit on surface in on-axis Booster beam, off-axis NuMI beam.
- TPC parameters
  - 70 ton fiducial volume
  - ~2.5m drift (500V/cm)
  - 3 readout planes (±60° Induction, vertical Collection)
  - 10000 channels (using Cold Preamplifiers)
- 30 PMTs for triggering
- Purification/Recirculation system.

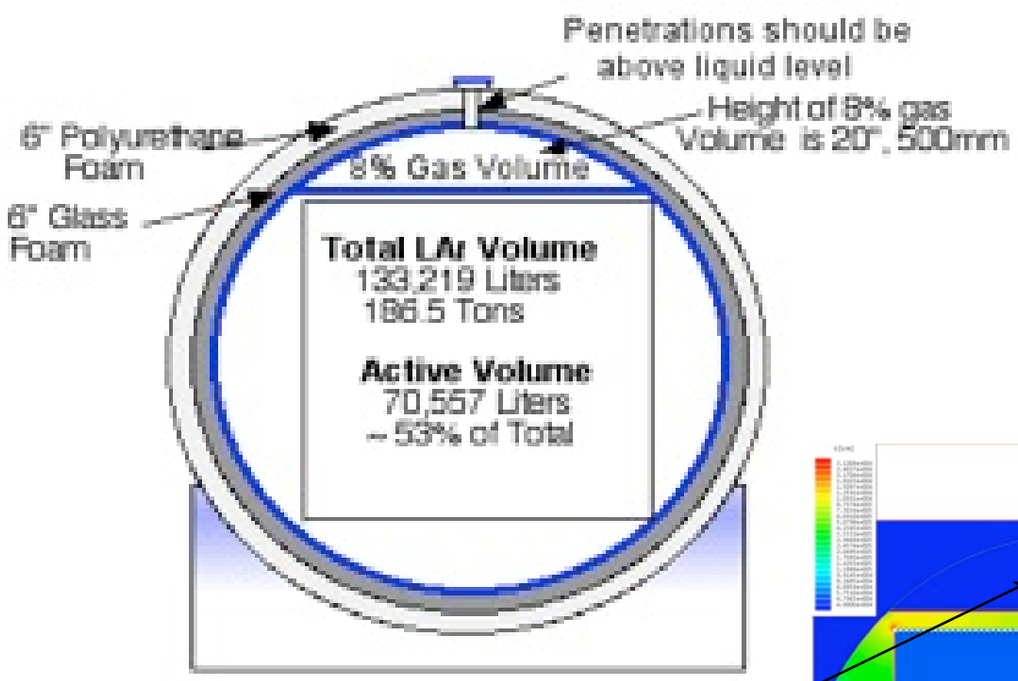

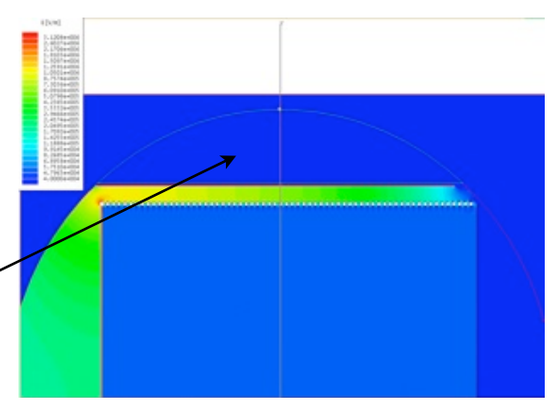

PreAmps in cold gas

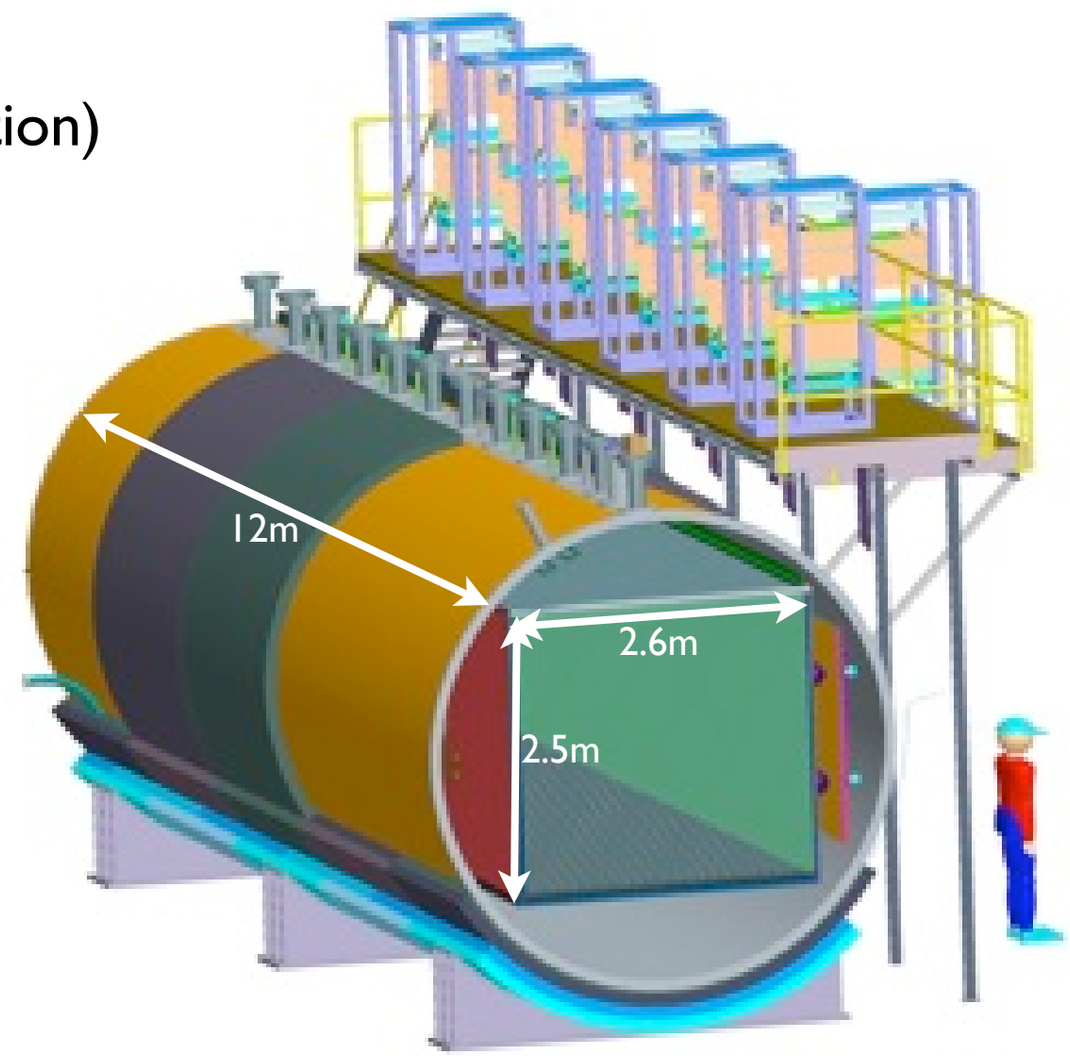

Location

- MicroBooNE will sit on surface in on-axis Booster beam, and off-axis (LE) NuMI beam.

	BNB	NuMI
Total Events	100k	60k
ν_μ CCQE	39k	21k
NC π^o	8k	7k
ν_e CCQE	250	1.7k
POT/year	$2\text{-}3\times10^{20}$	4×10^{20}

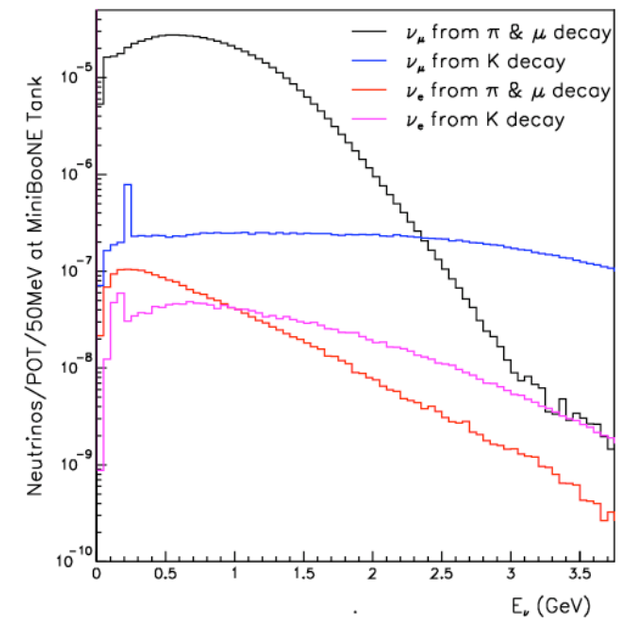

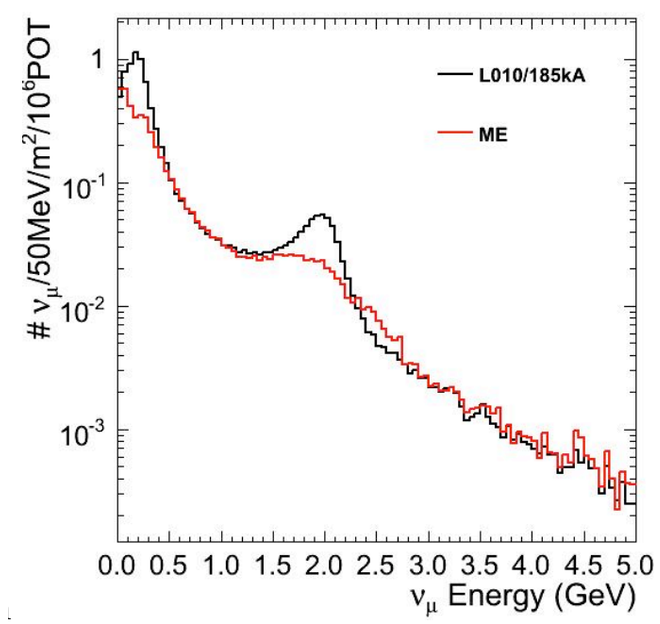

Physics Goals

- Address the MiniBooNE low energy excess
- Utilize electron/gamma tag (using dE/dX information).
- Low Energy Cross-Section Measurements (NC π^o, $\Delta \rightarrow N\gamma$,Kaon production, Photonuclear, ...)
- Use small (~500) sample of Kaons from BNB to study proton-decay sensitivity.
- Develop automated reconstruction.

Discrimination via dE/dX

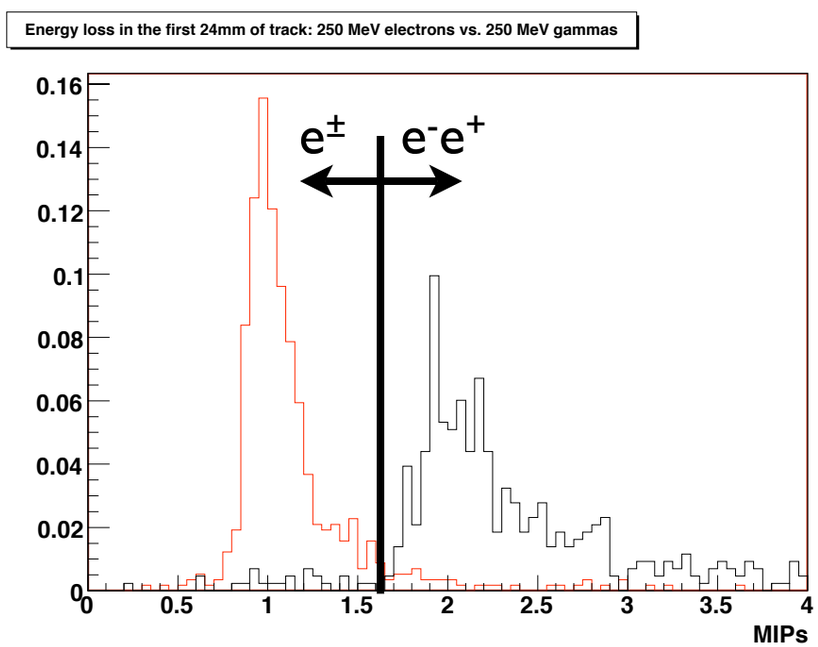

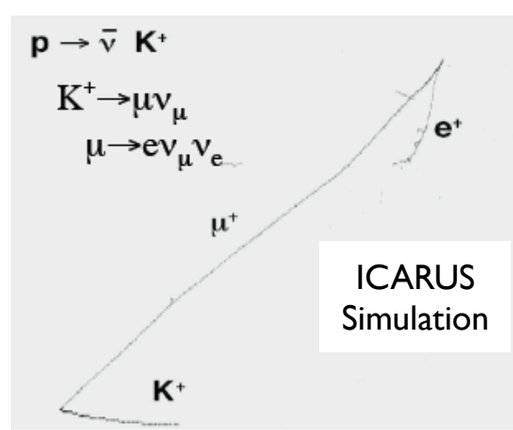

MiniBooNE Result

300-475MeV: 96±19(stat)±21(sys) events

200-300MeV: 91±19 (stat)±25 (sys) events

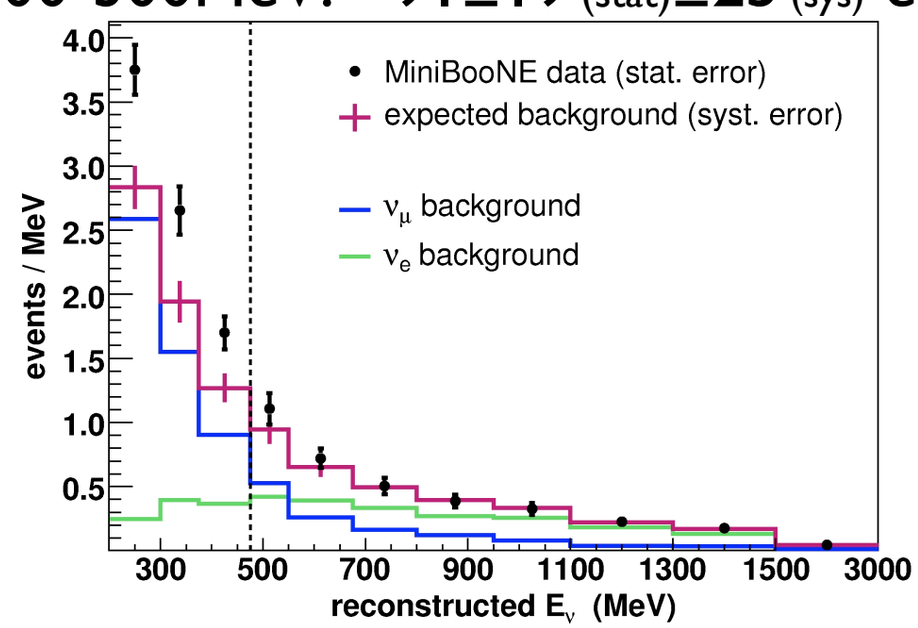

MicroBooNE will have 9σ significance for electrons, 3.4σ for photons

Hardware R&D

- Purity test:
  - Phase 0: Purge vessel with argon gas, then fill with liquid, to see if high-purity liquid can be achieved without initial evacuation.
  - Larger LArTPCs will most likely not be evacuable, so purging will be necessary.
- Cold Electronics (next slide)
- Long drift (2.5m), though not as long in massive LArTPCs, will test purity and reconstruction schemes.
- PMT operation in liquid will aid in understanding triggering capability necessary in future detectors.
- Real data essential to understanding hardware performance.

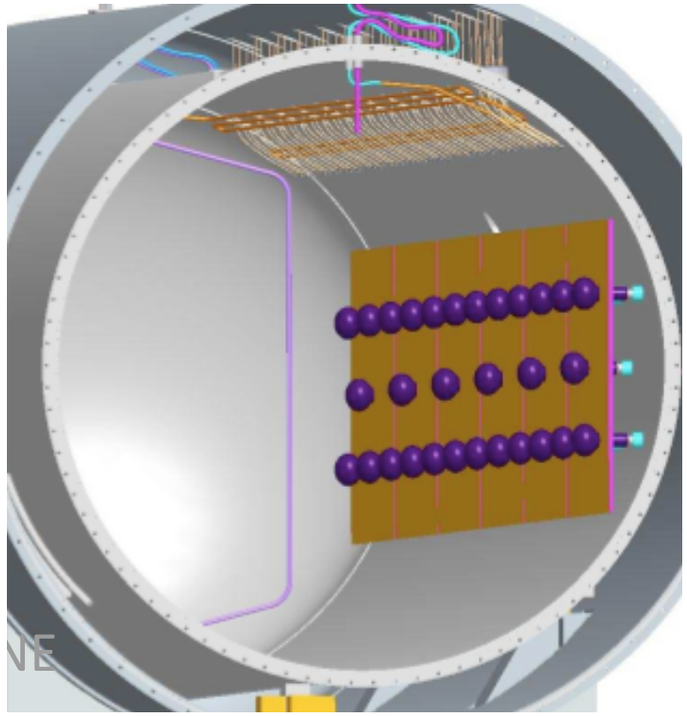

PMTs will allow for accurate t0 determination, as well as triggering power

Cold Electronics

- Preamps will be placed inside of cryostat for first time in an LArTPC detector.
- Necessary step along the path to large detectors where signals must make long transits.
- Many questions can be answered by MicroBooNE.
  - JFET/CMOS performance (~4 year development required for CMOS).
  - Maintaining purity with electronics inside tank.
  - Heat load due to power output of electronics in tank.
  - Multiplexing signals.

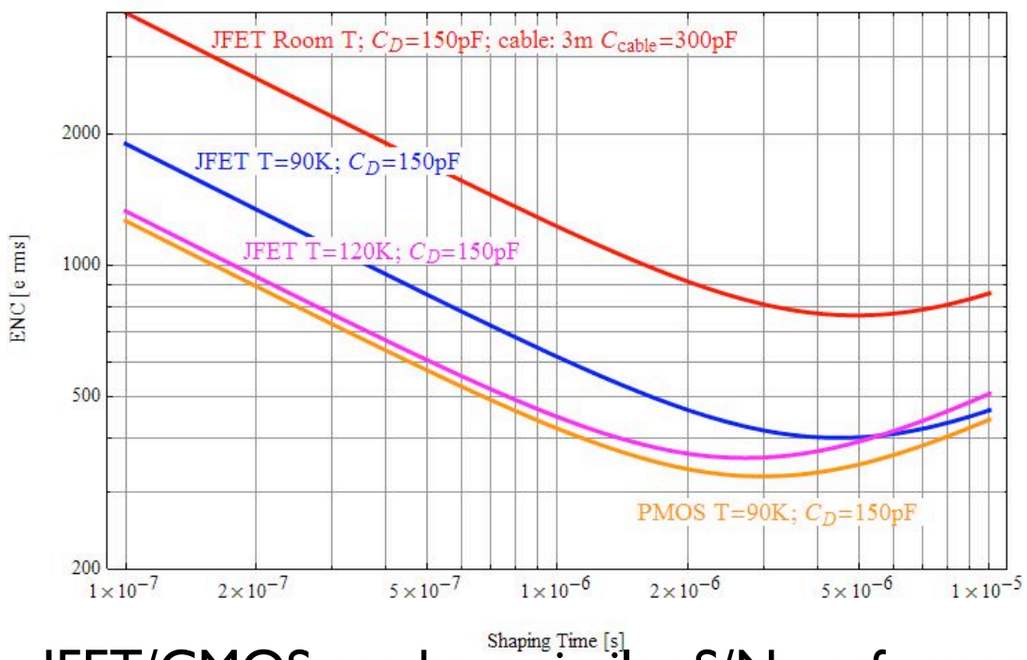

JFET/CMOS can have similar S/N performace

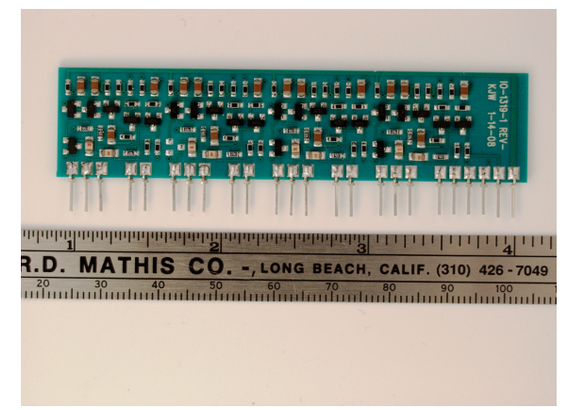

Quad-channel Pre-Amp prototype

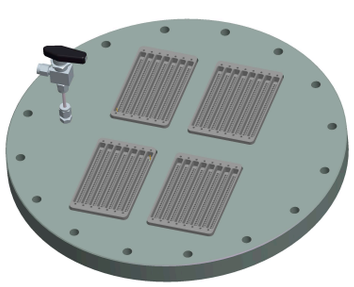

ATLAS style feedthrough

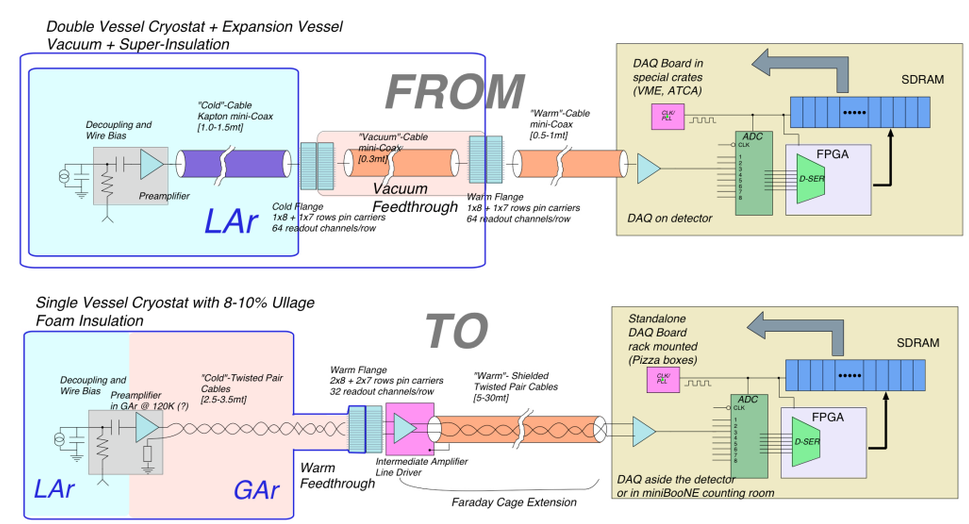

Readout Chain Evolution in Addendum

Liquid Argon in the U.S.

Materials Test Stand

Posters at 2008 Users Meeting:
"Current Status of the ArgoNeuT Experiment"
-Taritree Wongjirad (Yale/Duke)
"MicroBooNE: Low Energy Neutrino Detection in Liquid Argon"
- Brian Walsh (Yale)
"LAr5: Liquid Argon TPC for Long Baseline Neutrino Physics"
- Andrea Albert (Rice) and Becca Jackson (Yale)

MicroBoone is the next step for this evolving technology.

2007 → 2007- → 2008- → 2011? → 201? → multiple kilotons

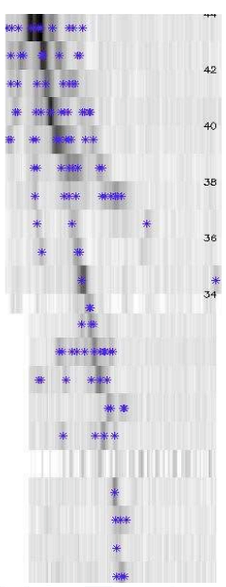

Yale Tracks

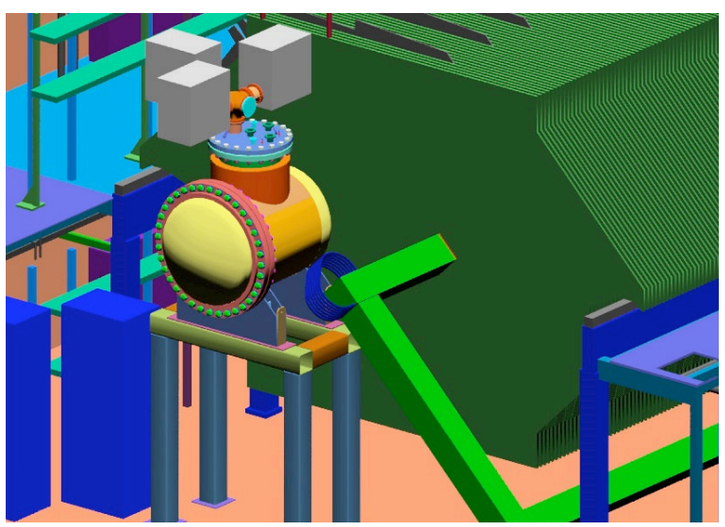

ArgoNeuT

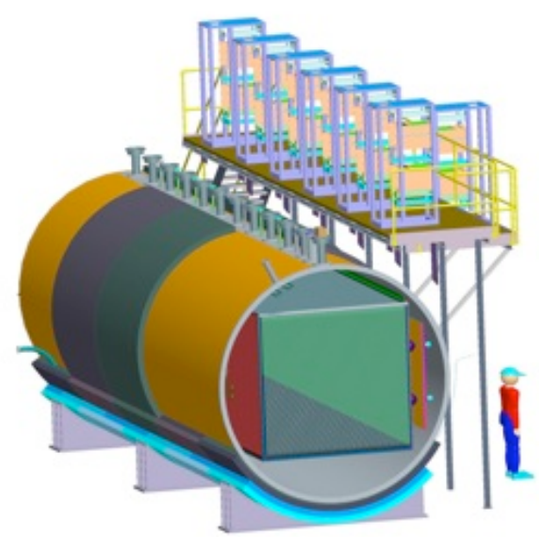

MicroBooNE

Conclusion

- MicroBooNE is a proposed LArTPC detector that combines physics and detector R&D.
- Main physics goals are to study the MiniBooNE excess, measure low energy cross-sections, and develop simulation/reconstruction software for LArTPCs.
- Detector R&D questions relevant for future massive LArTPC detectors (long drift, purity, cold electronics) will be addressed.
- Proposal and addendum have been submitted to the PAC this past year....we hope to hear back from them in the coming weeks.

www-microboone.fnal.gov

BACK UP SLIDES

Noble Liquids: Properties

- Ionization and scintillation light used for detection (transparency to own scintillation).
- Ionization electrons can be drifted over long distances in these liquids.
- Very good dielectric properties allow high-voltages in detector.
- Argon is cheap and easy to obtain (1% of atmosphere).

	Water	He	Ne	Ar	Kr	Xe
Boiling Point [K] @ 1atm	373	4.2	27.1	87.3	120.0	165.0
Density [g/cm^3]	1	0.125	1.2	1.4	2.4	3.0
Radiation Length [cm]	36.1	755.2	24.0	14.0	4.9	2.8
Scintillation [γ /MeV]	-	19,000	30,000	40,000	25,000	42,000
dE/dx [MeV/cm]	1.9		1.4	2.1	3.0	3.8
Scintillation λ [nm]		80	78	128	150	175

Cryogenics

- Preliminary studies have been performed to understand thermal load of system.
- ~16" glass foam insulation
- 3.4kW total load (13W/m^2)
- Temp. gradient <<0.1K

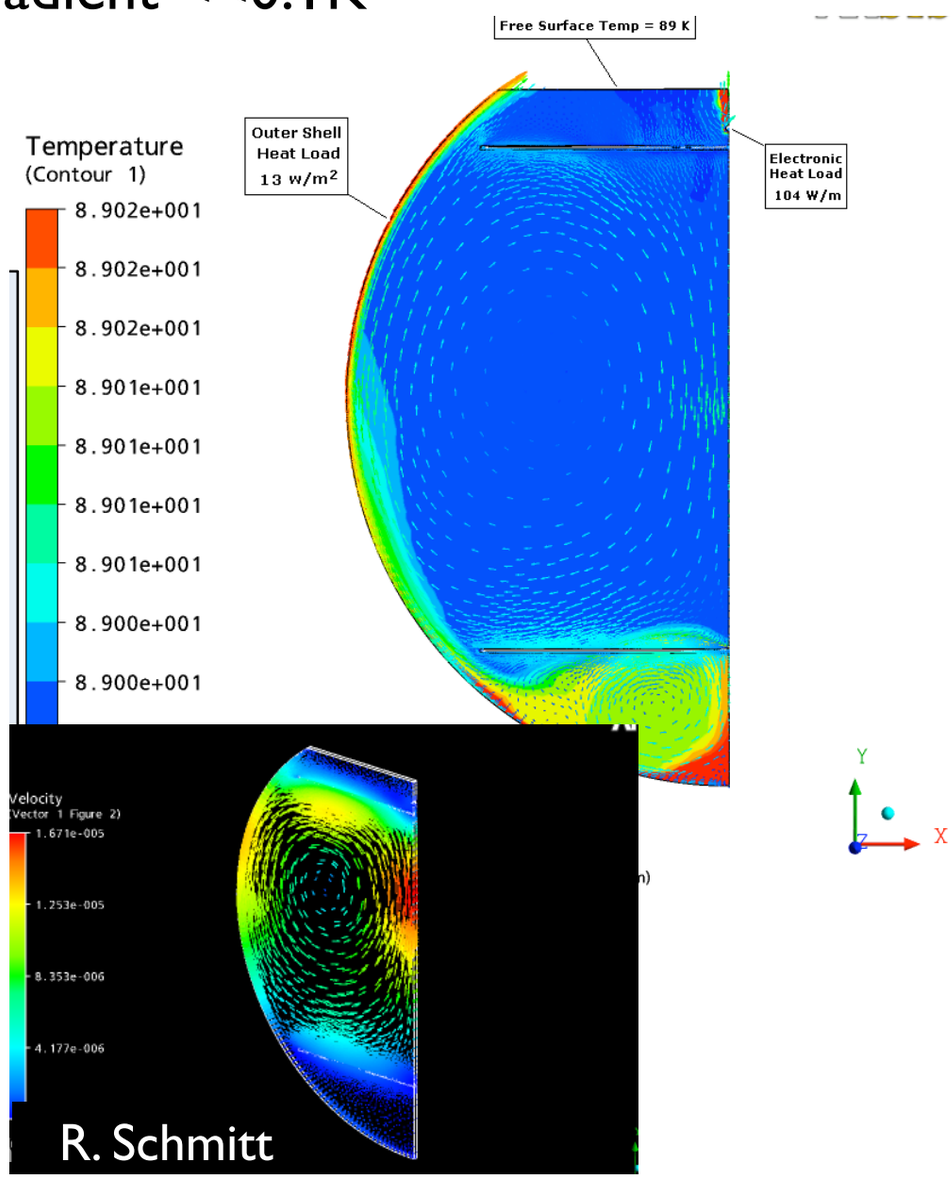
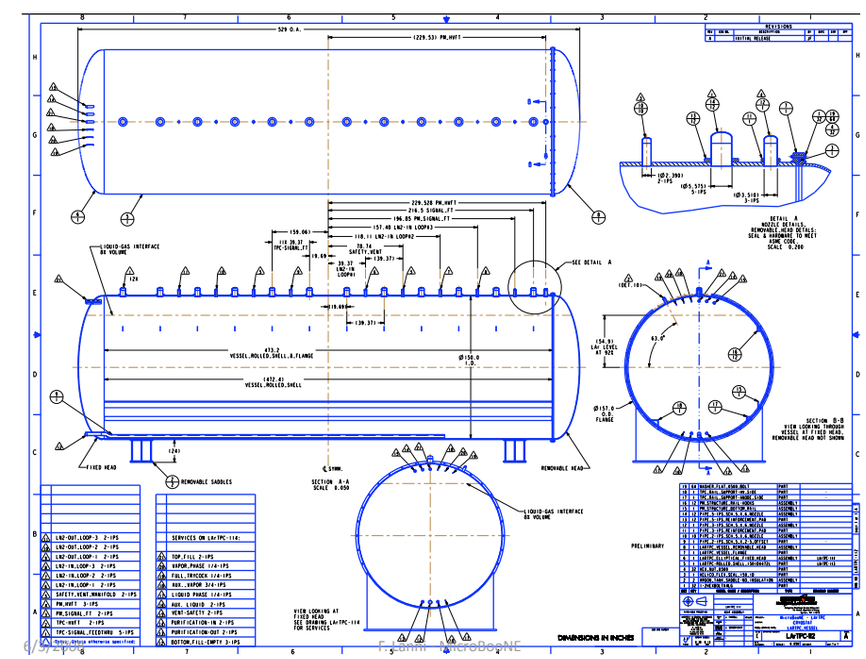
Temperature/velocity distrubtions