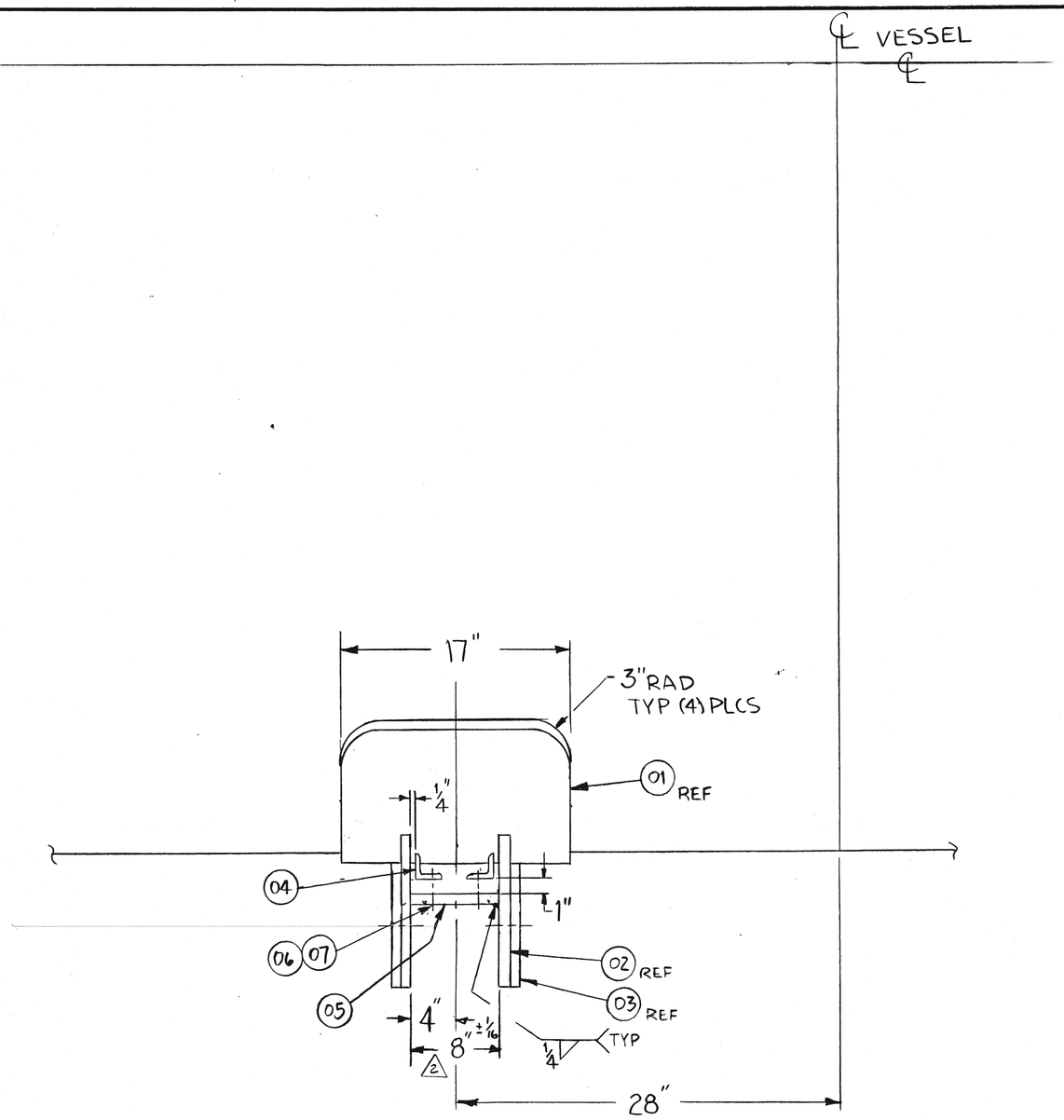


SIDE VIEW

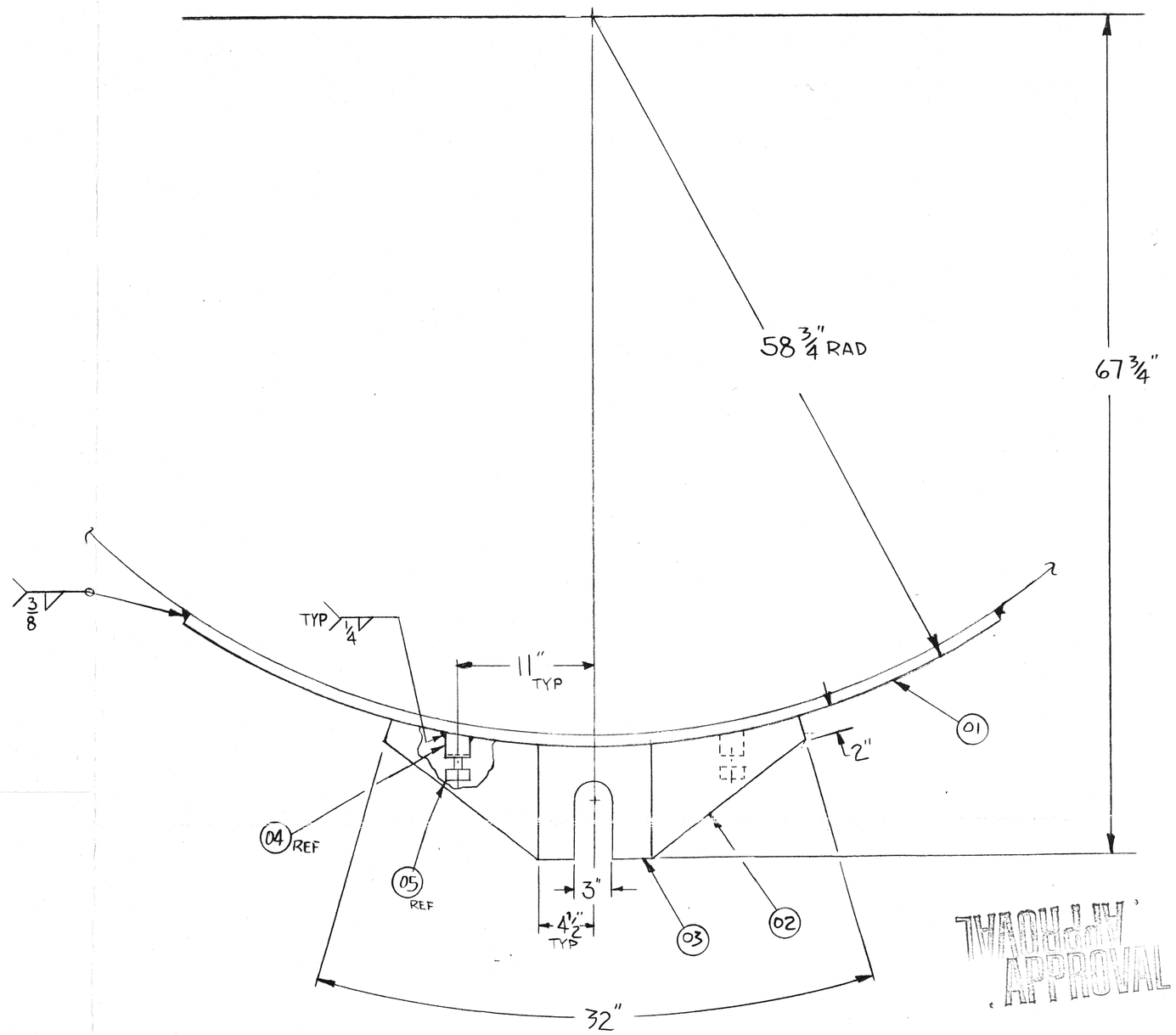


END VIEW

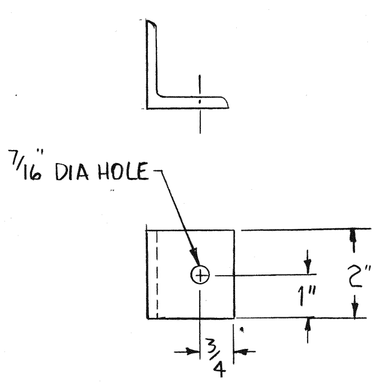


DETAIL I-04

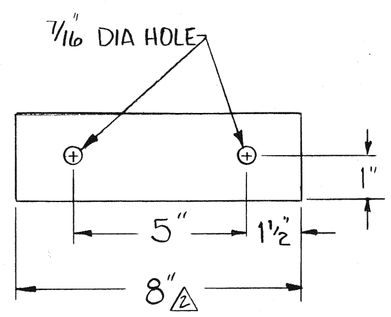


DETAIL I-05

2 NOTE:
SLOT IN ITEMS 02 & 03
TO BE MACHINED BY
FERMILAB.

DEC 22 1988

| MK | REVISION | BY | DATE |
|---|---|---|---|
| 2 | ADDED NOTE, 8" WAS 6 1/2<br>8" ±1/16 WAS 8" | SAM<br>LDH | 11-28-88<br>12-16-88 |
| 1 | REDESIGNED ACTUATOR | SAM<br>LDH | 10-17-88<br>12-16-88 |

TITLE ACTUATOR DETAIL TEST DØ

LOX
LOX EQUIPMENT COMPANY
P.O. BOX 198, DELPHI, INDIANA 46923

STANDARD TOLERANCE TO BE ±1/8 UNLESS OTHERWISE NOTED.

THIS DRAWING AND DESIGN TO BE THE PROPERTY OF THE LOX EQUIPMENT CO. AND IS SUBMITTED ON THE CONDITION THAT IT IS NOT TO BE COPIED, IN WHOLE OR IN PART, OR USED FOR ANY PURPOSE DETRIMENTAL TO THE LOX EQUIPMENT COMPANY.

| | | DATE |
|---|---|---|
| DRAWN | SAM | 10-17-88 |
| CHECKED | LDH | 10-18-88 |
| APPROVED | LDH | 10-18-88 |
| SCALE | 1/8" = 1" | |
| DWG. NO. | C87-0782 | REV. 2 |

JOB: 301736

N12397