SYM	NO	DESCRIPTION	DETAIL
A	2 PR	TORSION BARS	
B	4	SUPPORT COLUMNS	
C	4	SUPPORT BLOCKS	
D	2	KEYS	

NOTE:

1. ALL ITEMS EXCEPT 9, 10 & 11 MUST BE INSTALLED PRIOR TO NESTING. 9, 10 & 11 TO BE FIT PRIOR TO ASSEMBLY.

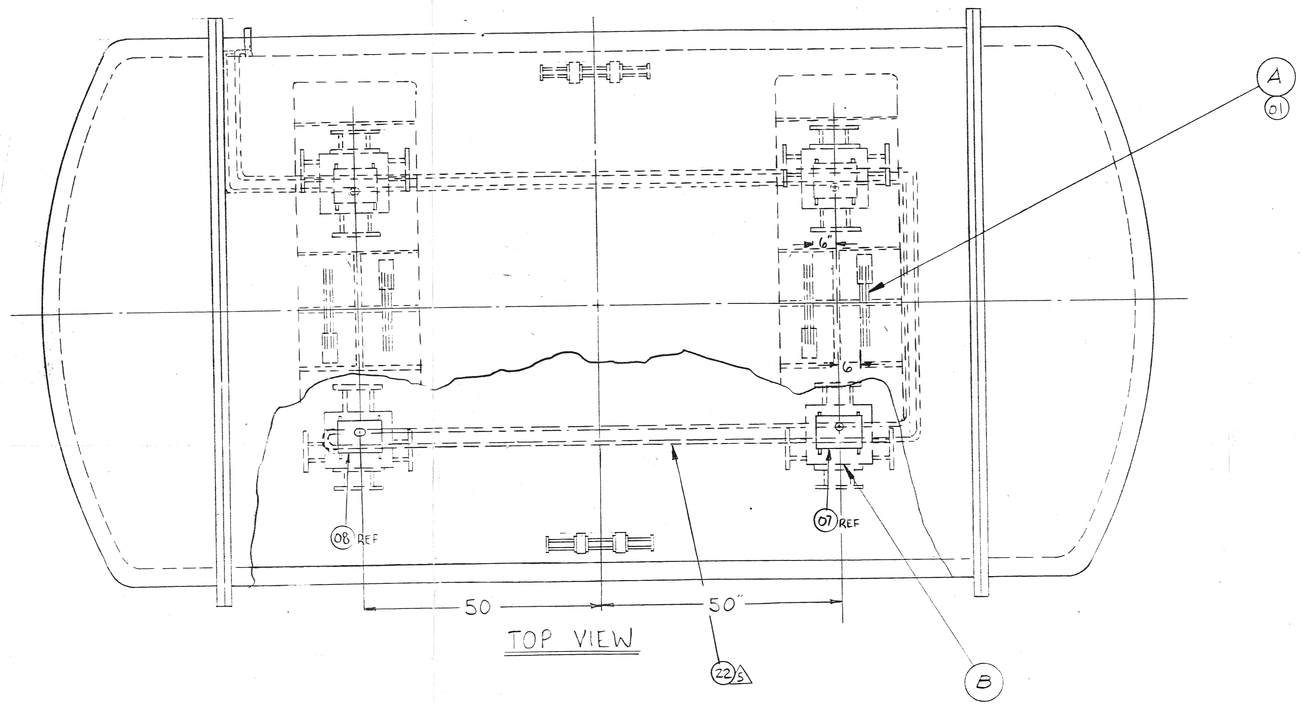

TOP VIEW

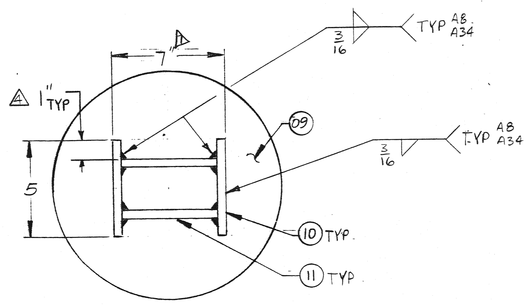

DETAIL "A"
OUTER SHELL ATTACH.
ROTATED 90°

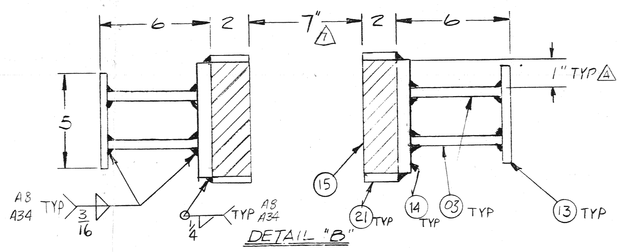

DETAIL "B"
INNER SHELL ATTACH.
ROTATED 90°

2. INSTALLATION OF INNER & OUTER SUPPORT ASSEMBLIES TO BE INSPECTED BY CUSTOMER. THESE ASSEMBLIES (ITEMS 07, 16, 17, 18 & 19, ITEMS 02, 03, 04, 05 & 06 ITEMS 03, 13, 14, 15 & 21) SHOULD BE BENCH WELDED, THEN FIT TO THE TANK FOR INSPECTION. TOLERANCE ON ALL FITUP ANGLES OF SUPPORT PARTS TO BE ± 1°.

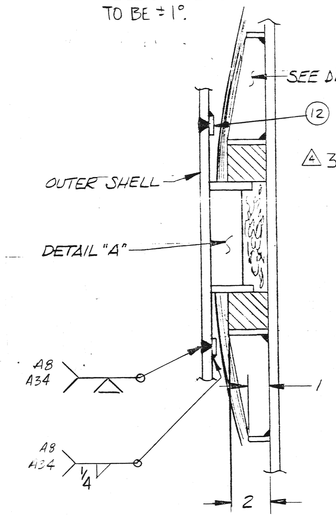

3. INSTALL INTERNAL SUPPORTS USING (4) CORNER JIG TO INSURE FLATNESS & DIMENSIONS OF HOLE CENTERS. SHIM DOWN FROM JIG TO ACCOMODATE ANY GAPS IN FITUP. IT IS MORE CRITICAL TO MAINTAIN FLATNESS AND HOLE PATTERN THAN TO MAINTAIN 41" HEIGHT. IF PARTS ARE INSTALLED LOW, HEIGHT CAN BE ATTAINED BY SHIMMING "ON SITE".

APPROVAL

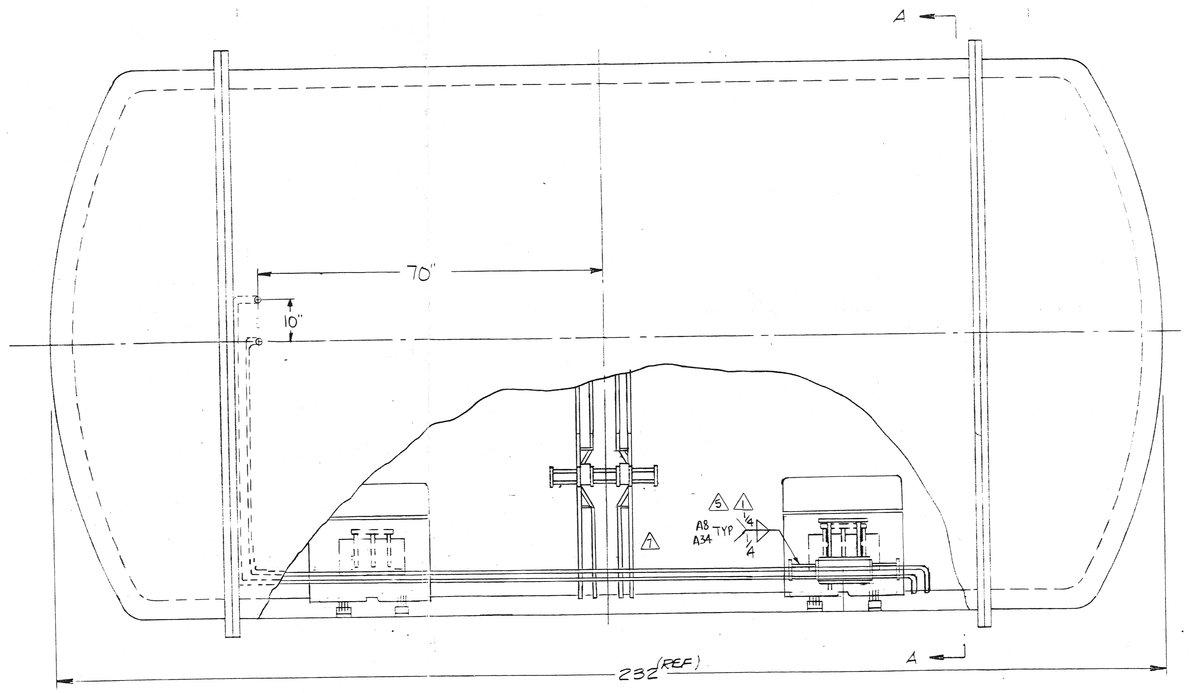

ELEVATION

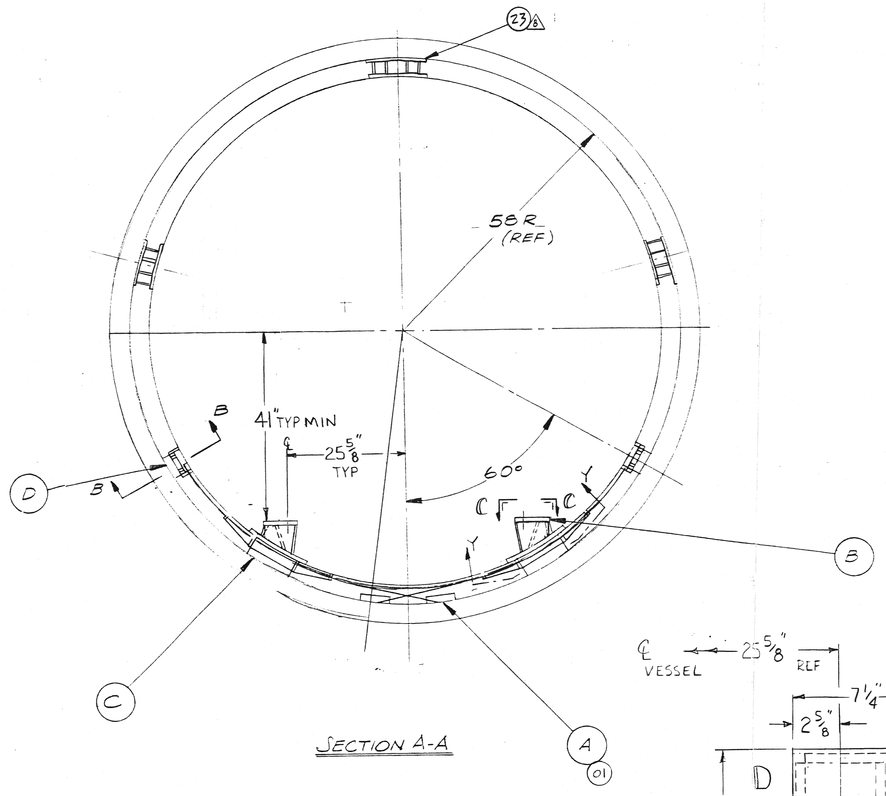

SECTION A-A

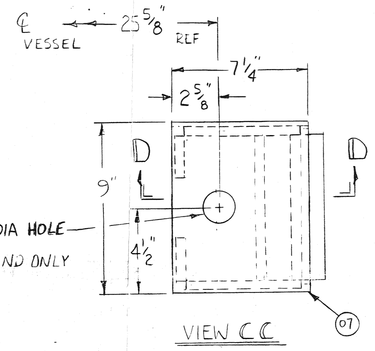

VIEW C-C

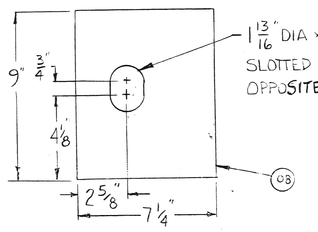

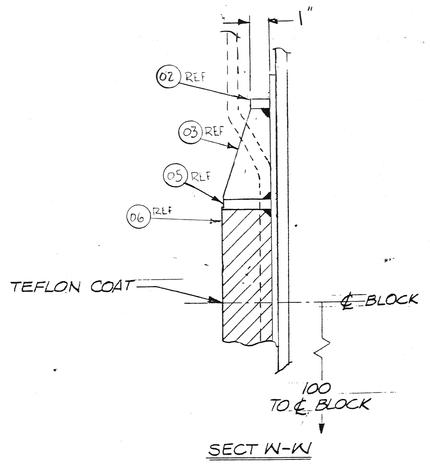

SECT W-W

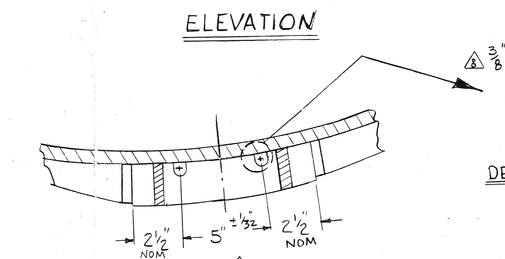

SECT X-X

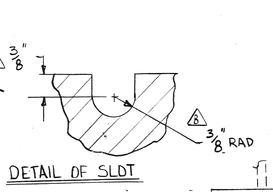

DETAIL OF SLOT

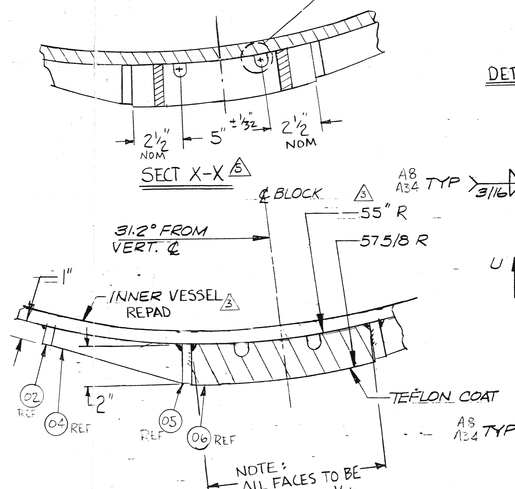

SECT U-U

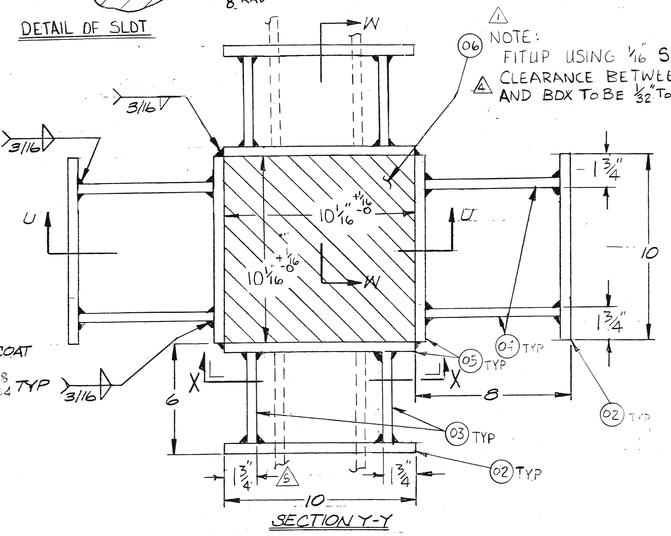

SECTION Y-Y

NOTE:
FITUP USING 1/16 SHIM STOCK
CLEARANCE BETWEEN MICARTA BLOCK AND BOX TO BE 1/32 TO 1/16 ON ALL SIDES.

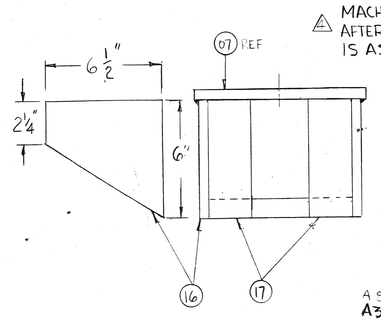

MACHINE FLAT AFTER WELDMENT IS ASSEMBLED

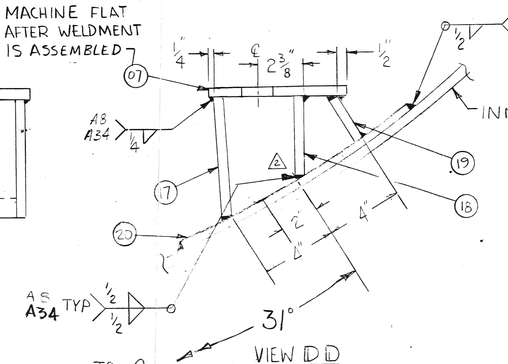

VIEW D-D

NOTE: ALL MAT'L 1/2 THK. 304 S.S.

DEC 22 1988

8	3/8" WAS 9/32, ADDED 1-23	SAM 12-28-88 LDH 12-30-88	
7	ADDED ANGLE TO IV 7 WAS 6"	16 & V1 1-5-88 16 & V1 LDH	
6	2-02 & 05 WERE 1/2" THK	SAM 10-19-88 LDH 10-19-88	
5	ADDED VIEW XX, ITEM 22, CHG DIM 1 1/4 WAS 2 1/2, CHG WELD PER LDH	SAM 8-19-88 LDH 8/16/88 7-6 8-17-88	
4	ADDED DIM., NOTE 2-3, CLEARANCE NOTE TO 2-06, MACHIN NOTE TO 3D7 RD LDH	SAM 6-21-88 LDH 6-24-88	
3	ADDED 1/4 REPAD TO V-EWS, REVISED 2-06 TO 1/2 REPAD PER LDH	SAM 5-[illegible] LDH 5-11-88	
2	1-18 WAS AT 1/4 ANGLE PER LDH	LDH 5/16/88	SAM 8-17-88 LDH 8-24-88 SAM 3-31-88
1	ADDED NOTE, DELETED VIEW 5B, NOTE WELD, ADDED WELD PER LDH		SAM 2-5-88 LDH 2-7-88
W.K.	REVISION	BY	DATE

TITLE: SUPT ASSY FERMI TEST DØ

LOX EQUIPMENT COMPANY
P.O. BOX 198, DELPHI, INDIANA 46923

DRAWN: SAM 12-23-88
CHECKED: LDH 12-30-88
APPROVED: LDH 1-14-88
SCALE:

STANDARD TOLERANCE TO BE: 1/8 UNLESS OTHERWISE NOTED.

THIS DRAWING AND DESIGN TO BE THE PROPERTY OF THE LOX EQUIPMENT CO. AND IS SUBMITTED ON THE CONDITION THAT IT IS NOT TO BE COPIED, IN WHOLE OR IN PART, OR USED FOR ANY PURPOSE DETRIMENTAL TO THE LOX EQUIPMENT COMPANY.

DWG NO. & REV: E87-0777

JOB: 30173