NOTE:

1. THIS VESSEL TO BE CONSTRUCTED IN GENERAL ACCORDANCE WITH ASME DIV 1. SECTION VIII. ALL MATERIALS TO BE DOCUMENTED PER CODE. THE VESSEL WILL NOT BE CODE STAMPED.
2. ITEMS 9 & 11 TO BE POLISHED TO 320 GRIT PRIOR TO INSTALLATION.
3. POLISH SUPPORT PAD LOCATIONS AND COAT WITH MOLY COMPOUND PRIOR TO NESTING.

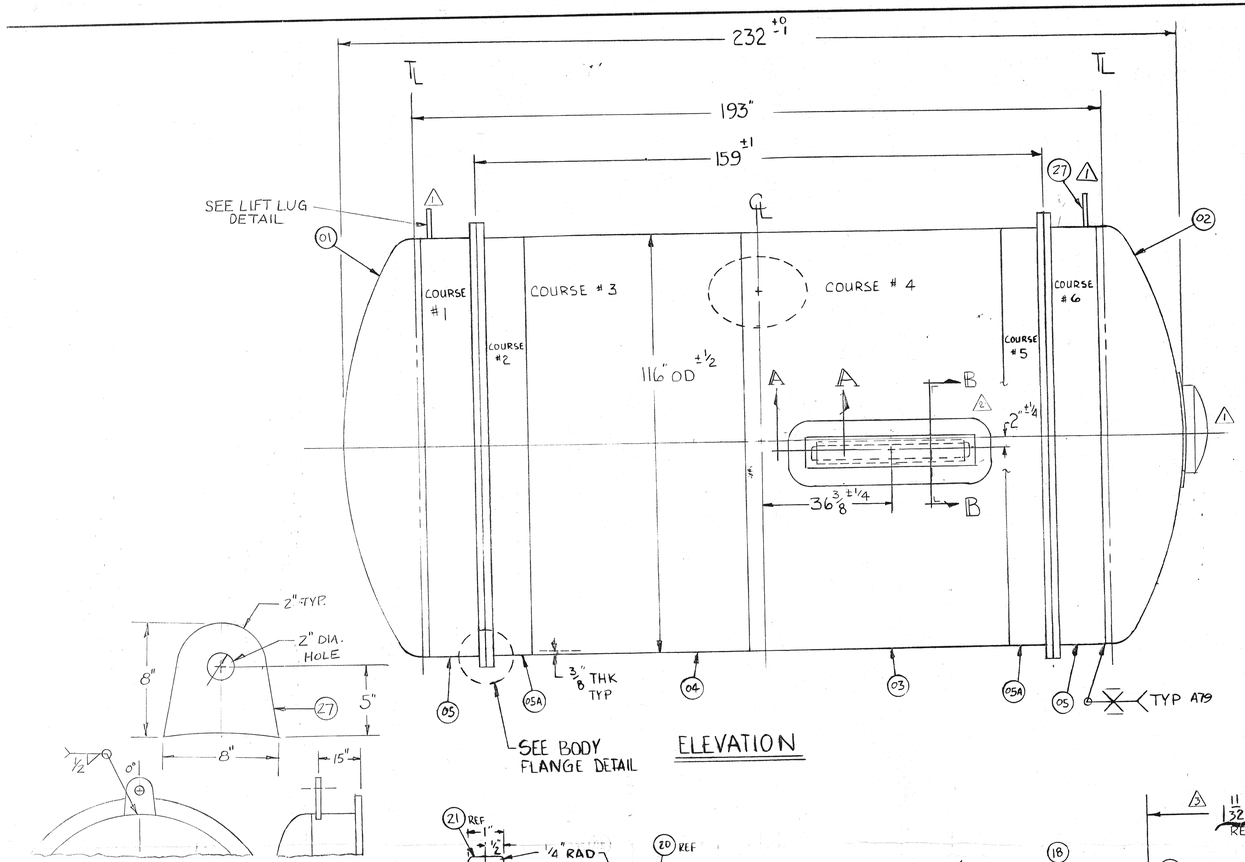

ELEVATION

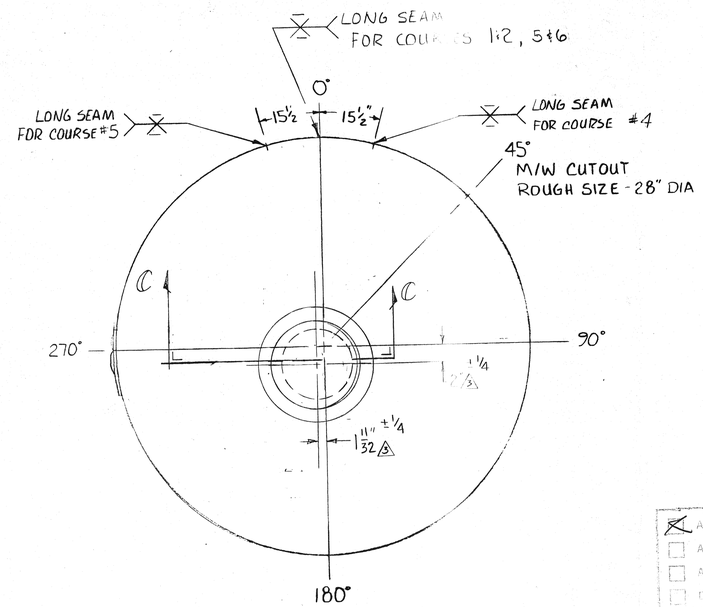

END VIEW

DETAIL LIFT LUG

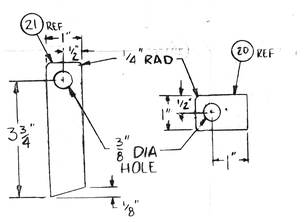

DETAIL ITEMS 20 & 21

TYP (4) PLCS

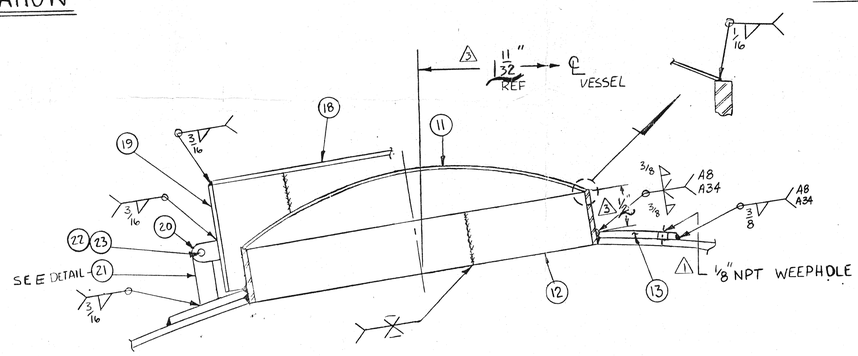

VIEW CC

SCALE 1/4" = 1"

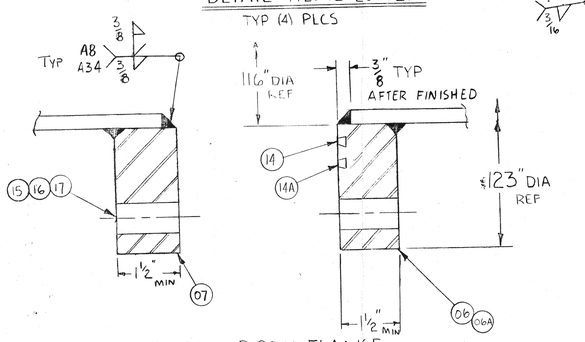

DETAIL BODY FLANGE

SCALE 1/2" = 1"

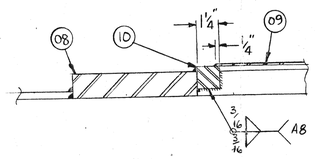

VIEW AA

SCALE 1/4" = 1"

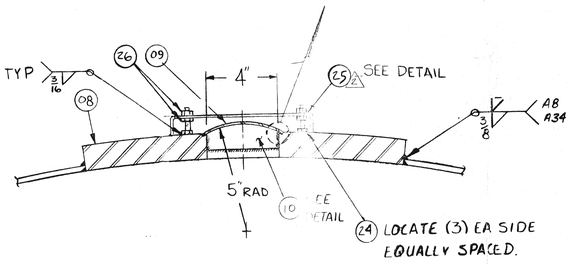

VIEW BB

SCALE 1/4" = 1"

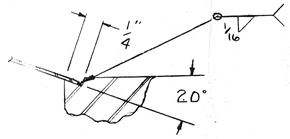

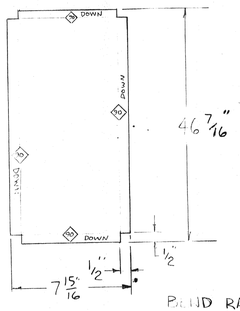

DETAIL I-25

ROUND RADIUS TO BE 1/8"

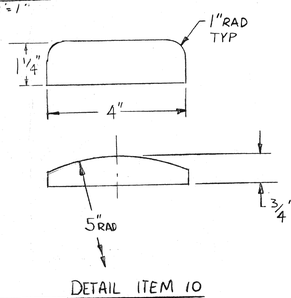

DETAIL ITEM 10

APPROVED

APPROVED AS NOTED – RESUBMIT

APPROVED AS NOTED – RESUBMITTAL NOT REQUIRED

DISAPPROVED

REVIEWED FOR GENERAL DESIGN CONCEPTS ONLY. NO WAIVER OF THE SUBCONTRACTOR'S RESPONSIBILITY FOR STRICT COMPLIANCE TO CONTRACT DOCUMENTS. ANY DEVIATION FROM THE CONTRACT DOCUMENTS MUST BE REQUESTED IN WRITING AND APPROVED BY THE SUBCONTRACT DOCUMENTS.

DATE: 10-25-88

REVIEWED BY: R. Allen

FERMI NATIONAL ACCELERATOR LABORATORY

APPROVAL

OCT 1 8 1988

MK	REVISION	BY	DATE
5	ADDED NOTES 2 & 3	SAM	10-14-88 LDH 10-17-88
4	ADDED NOTE #1 PER LDH	SAM	8-31-88 LDH 8/16/88
3	1 11/32" WAS 16 1/2", 2" WAS 1" PER LDH	SAM	4-4-88 LDH 4-5-88
2	MOVE WINDOW & CHG I-25 PER CUST	SAM	3-1-88 LDH 3-1-88
1	FIXED VIEWS PER LDH	SAM	2-3-88 LDH 2-9-88

TITLE: OUTER VESSEL ASSY FERMI TEST DO

RICHMOND-LOX EQUIPMENT COMPANY
DELPHI DIVISION
BOX 198, DELPHI, INDIANA 46923

STANDARD TOLERANCE TO BE ± 1/8 UNLESS OTHERWISE NOTED.

THIS DRAWING AND DESIGN TO BE THE PROPERTY OF THE RICHMOND-LOX EQUIPMENT CO. AND IS SUBMITTED ON THE CONDITION THAT IT IS NOT TO BE COPIED, IN WHOLE OR IN PART, OR USED FOR ANY PURPOSE DETRIMENTAL TO THE RICHMOND-LOX EQUIPMENT COMPANY.

		DATE
DRAWN	SAM	12-31-3
CHECKED	LDH	1-14-88
APPROVED	LDH	1-14
SCALE		
DWG. NO.	DB7-0772	REV. G

JOB · 30173