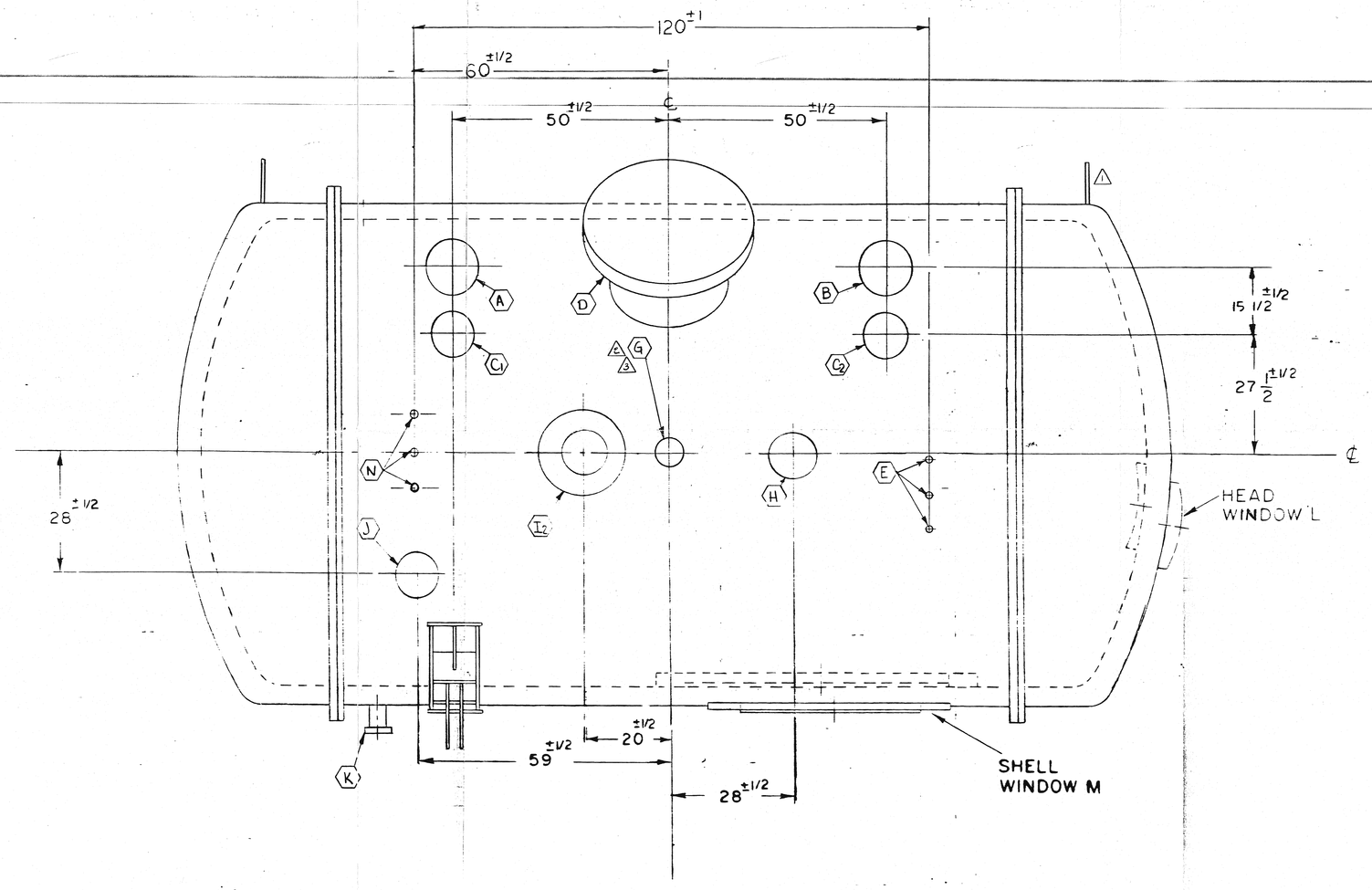

TOP VIEW

	PORT	SIZE	NO	DESCRIPTION, USAGE	DETAIL	
	A, B	6 IPS	2	SIGNAL PORTS	D87-0774	03
	C_1, C_2	6 IPS	2	HIGH VOLTAGE	D87-0774	
	D	20 IPS	1	VIEWING PORT	B87-0775	04
	E	3/4 IPS	3	LN_2 - IN 3/4x2 BAYONET	D87-0776	05
△1	F	2 IPS	1	LIQUID ARGON	D87-0790	06
△1	G	3/4 IPS	1	AIR GAS / VACUUM	D87-0790	
	H	6 IPS	1	INNER VESSEL PRESSURE RELIEF	D87-0774	03
△2						
	I_2	12 IPS	1	OUTER VESSEL PRESSURE RELIEF	D87-0790	06
△1	J	6 IPS	1	ELECTRIC POWER	D87-0774	03
	K	4 IPS	1	INSULATING VACUUM	D87-0790	06
	L			HEAD WINDOW - INNER	D87-0773	02
				HEAD WINDOW - OUTER	D87-0772	01
	M			SHELL WINDOW - INNER	D87-0773	02
				SHELL WINDOW - OUTER	D87-0772	01
	N	1-1/2	3	N_2 OUTLET 1 1/2x3 BAYONET	D87-0776	05

△ NOTE:

1. NOZZLE LOCATION TOLERANCE ± 1/2
2. THE SHELL WINDOW WILL BE LEVEL i.e., EITHER END SHALL BE THE SAME ELEVATION AS THE CENTERLINE ± 1/16.

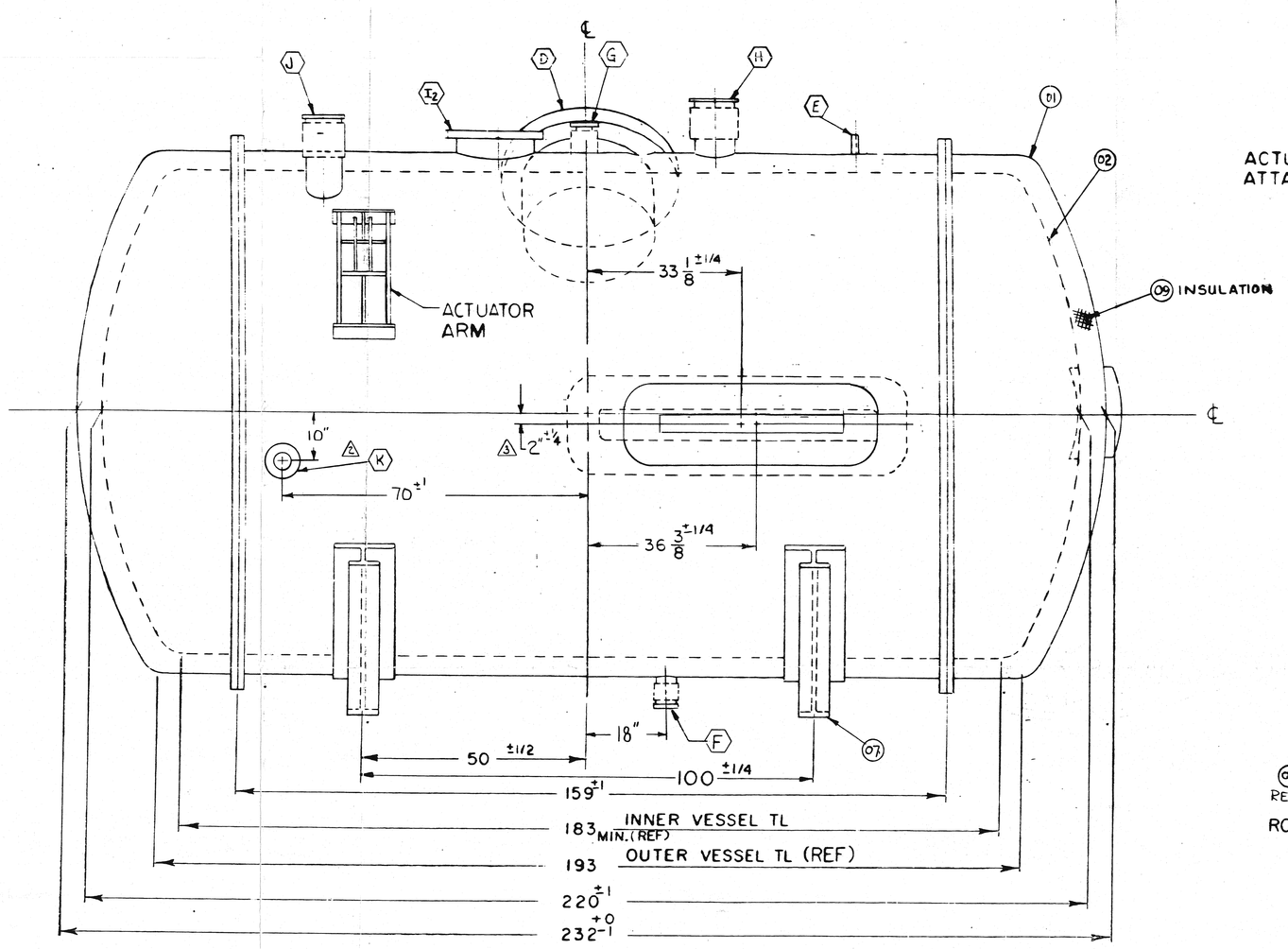

SIDE ELEVATION

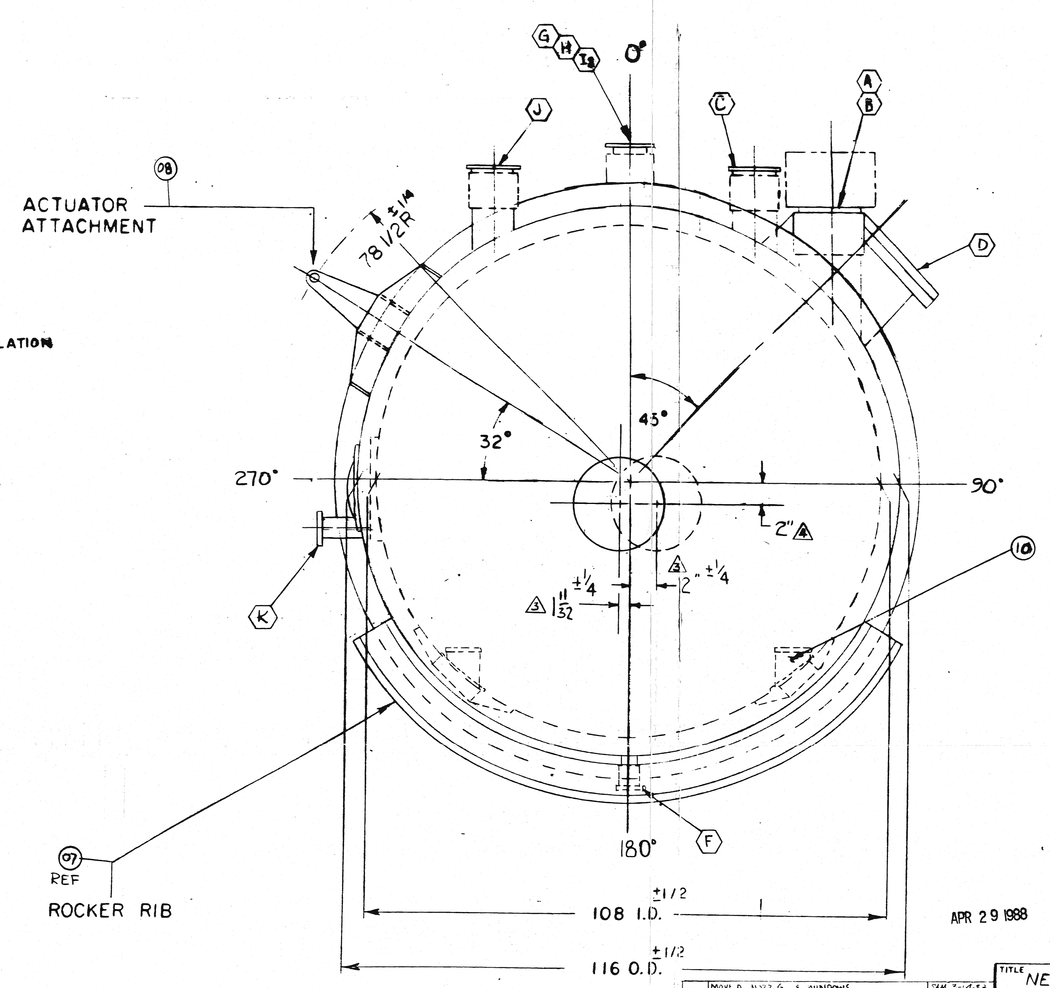

REAR VIEW

☒ APPROVED
☐ APPROVED AS NOTED — RESUBMIT
☐ APPROVED AS NOTED — RESUBMITTAL NOT REQUIRED
☐ [illegible] DESIGN CONCEPTS [illegible] CONTRACTORS [illegible] TO [illegible] PROCEED. [illegible] WORK NOT [illegible] BY THE CONTRACT DOCUMENTS.

DATE: 5-27-88 REVIEWED BY: R. [illegible]

FERMI NATIONAL ACCELERATOR [illegible]RY

APPROVAL

APR 29 1988

4	1" 32 WAS 16"2, 2" WAS 12"/4" 2" WAS 1" PER LDH	JAN 1-4-88 LDH 1-5-88	
3	MOVED NOZZ G + WINDOWS PER LDH	SAM 5-14-86 LDH 5-16-86	
2	DELETED NOZZ I; RELOCATED NOZZ G+K PER CUST ADDED NOTE #2	SAM 5-29-83 LDH 5-7-83	
1	NOZZ F+G WERE 1.5" ADDED NOTE 3 LIFTLUGS PER LDH	SAM 2-5-88 LDH 2-7-88	
MK	REVISION	BY	DATE

TITLE: NESTING ASSY FERMI TEST DØ

LOX EQUIPMENT COMPANY
P.O. BOX 196, WEST MILL, INDIANA 46911

STANDARD TOLERANCE TO BE ± 1/8 UNLESS OTHERWISE NOTED

THIS DRAWING AND DESIGN TO BE THE PROPERTY OF THE RICHMOND-LOX EQUIPMENT CO. AND SUBMITTED ON THE CONDITION THAT IT IS NOT TO BE REPRODUCED IN WHOLE OR IN PART OR USED FOR ANY PURPOSE DETRIMENTAL TO THE RICHMOND-LOX EQUIPMENT COMPANY

DRAWN	SAM	DATE 12-28-87
CHECKED	[illegible]	DATE 1-14-88
APPROVED	LDH	DATE 1-14-88
SCALE		
DWG NO.	E87-0771	REV 4

JOB: 30173