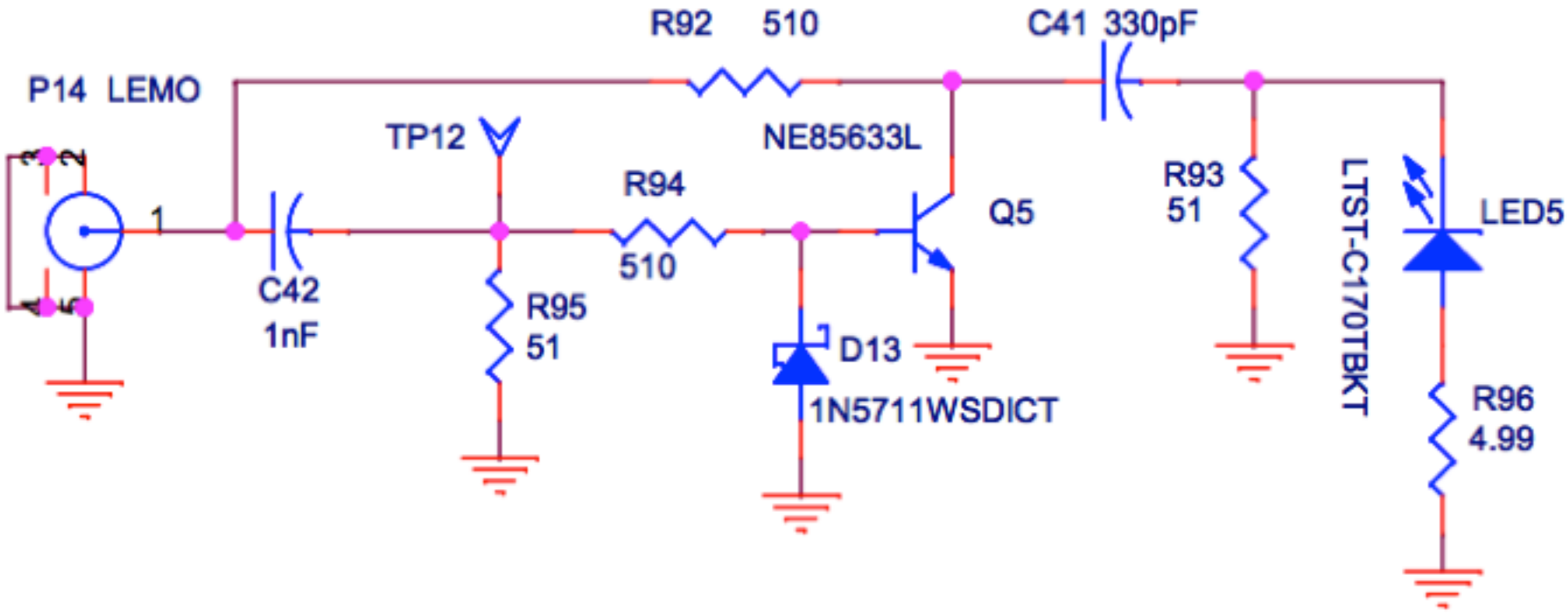
R92 510
C41 330pF
P14 LEMO
TP12
NE85633L
R94
510
Q5
R93
51
LTST-C170TBKT
LED5
1
C42
1nF
R95
51
D13
1N5711WSDICT
R96
4.99