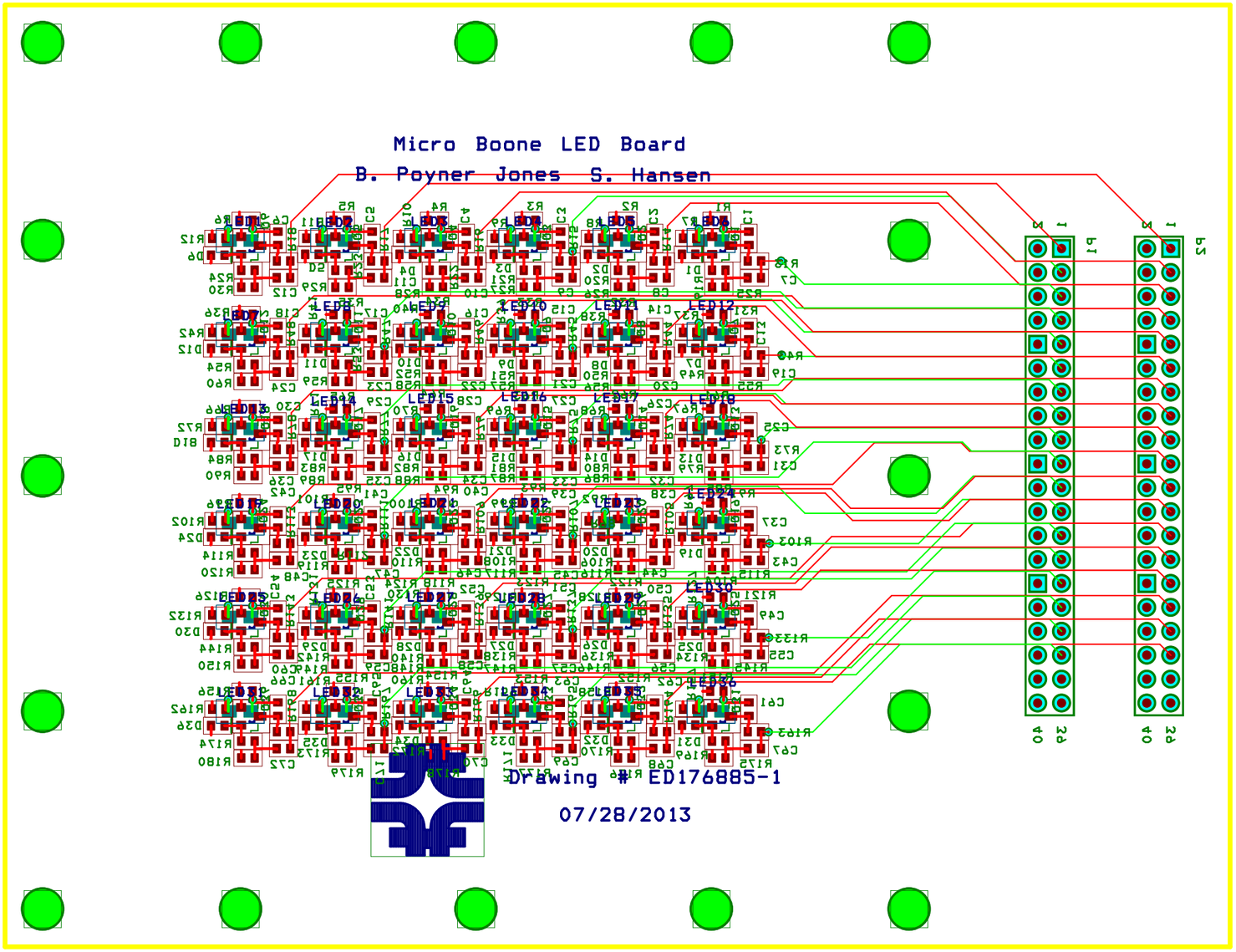
Micro Boone LED Board
B. Poyner Jones S. Hansen
Drawing # ED176885-1
07/28/2013

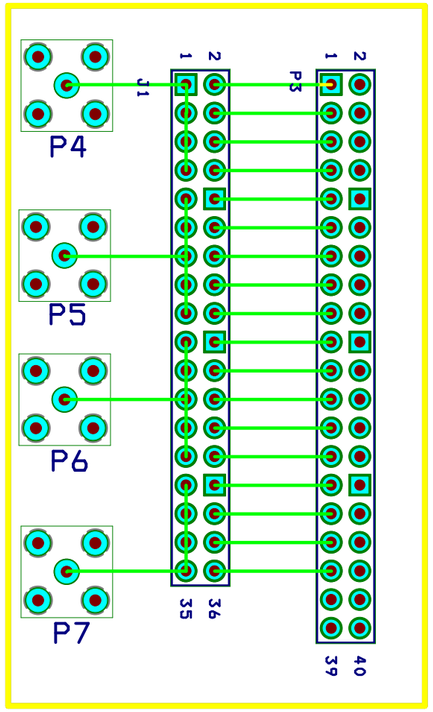
P4
P5
P6
P7
J1
P3