Final Cryostat Closure

Jim Kilmer

1/9/2014

But First Cryogenics Status

- Received approval to start Phase 1 , 11/27/13
- Cooled down LAr dewar and got Dzero liquid
- Dewar pressure controls didn’t work as planned
- Resulted in the dewar going subatmospheric with the vent valve open contaminating the LAr
- Couldn’t get the LAr pump running

Status 2

- Pump strainer plugged(?) and pump suction line has vapor traps that were not well understood before the testing
- Suction line modifications being reviewed now
- Filling the HV test cryostat from 160 liter dewars now
- Note that Phase 2 design does not have suction line problems

Final welding

- Move Lifting lugs
- Modify level probe and HV vent nozzles
- Weld on head
  - Add multiple grounding lugs for welder
  - Add cabling attachments for inside the head
  - Complete final circumferential weld

Move Lifting Lugs

Modify level probe and HV vent nozzles

- Switched spare and level gage nozzles to allow a HV ground shield requested by Bo around the level gage probe
- With higher LAr level than in the original plan (allows removal of the top ground plane), the HV nozzle vent was below the liquid level

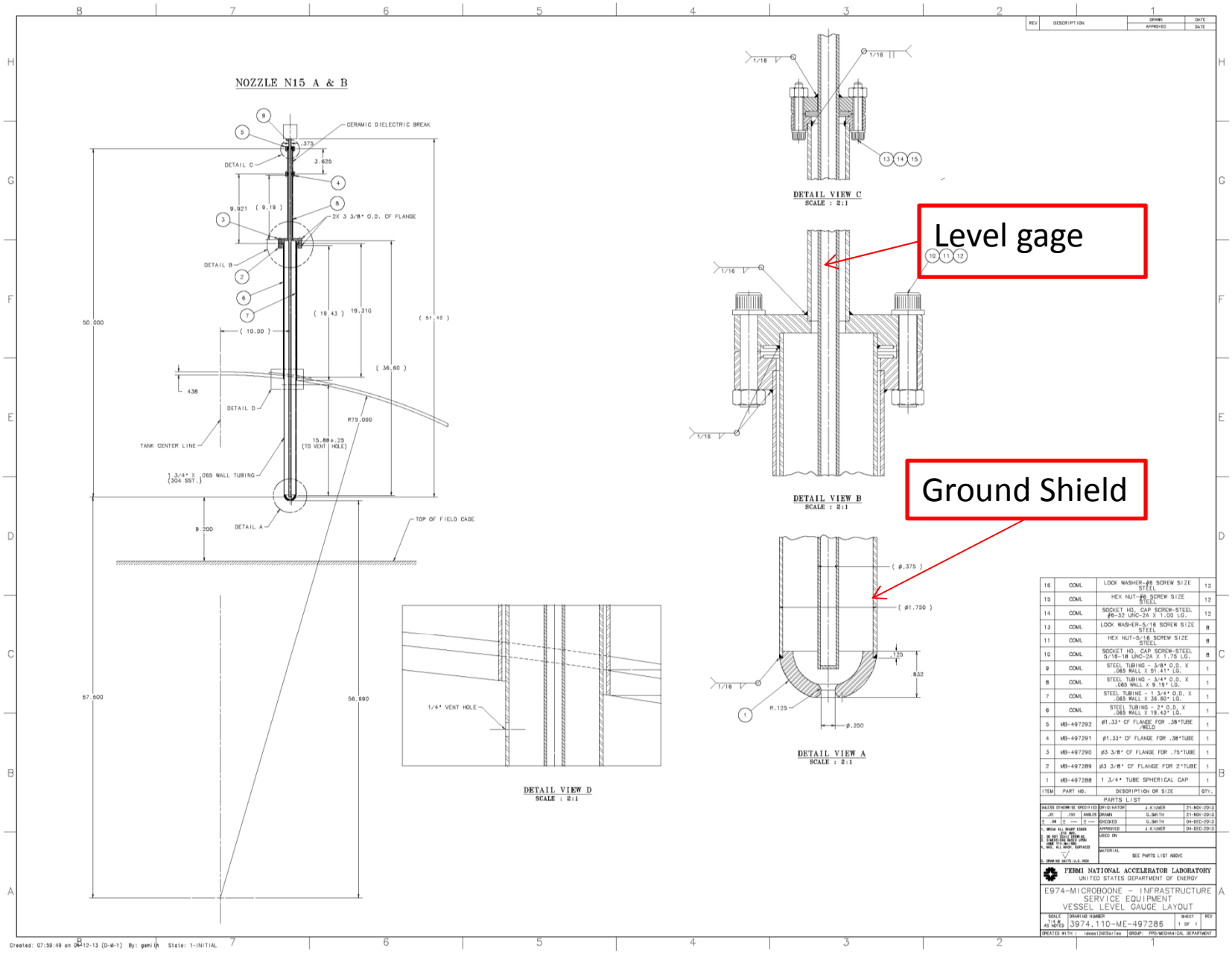
NOZZLE N15 A & B
CERAMIC DIELECTRIC BREAK
DETAIL C
DETAIL B
DETAIL D
DETAIL A
2X 3 3/8" O.D. CF FLANGE
TANK CENTER LINE
1 3/4" X .065 WALL TUBING (304 SST.)
TOP OF FIELD CAGE
1/4" VENT HOLE
DETAIL VIEW C
SCALE : 2:1
DETAIL VIEW B
SCALE : 2:1
DETAIL VIEW A
SCALE : 2:1
Level gage
Ground Shield
FERMI NATIONAL ACCELERATOR LABORATORY
UNITED STATES DEPARTMENT OF ENERGY
E974-MICROBOONE - INFRASTRUCTURE SERVICE EQUIPMENT
VESSEL LEVEL GAUGE LAYOUT
PARTS LIST

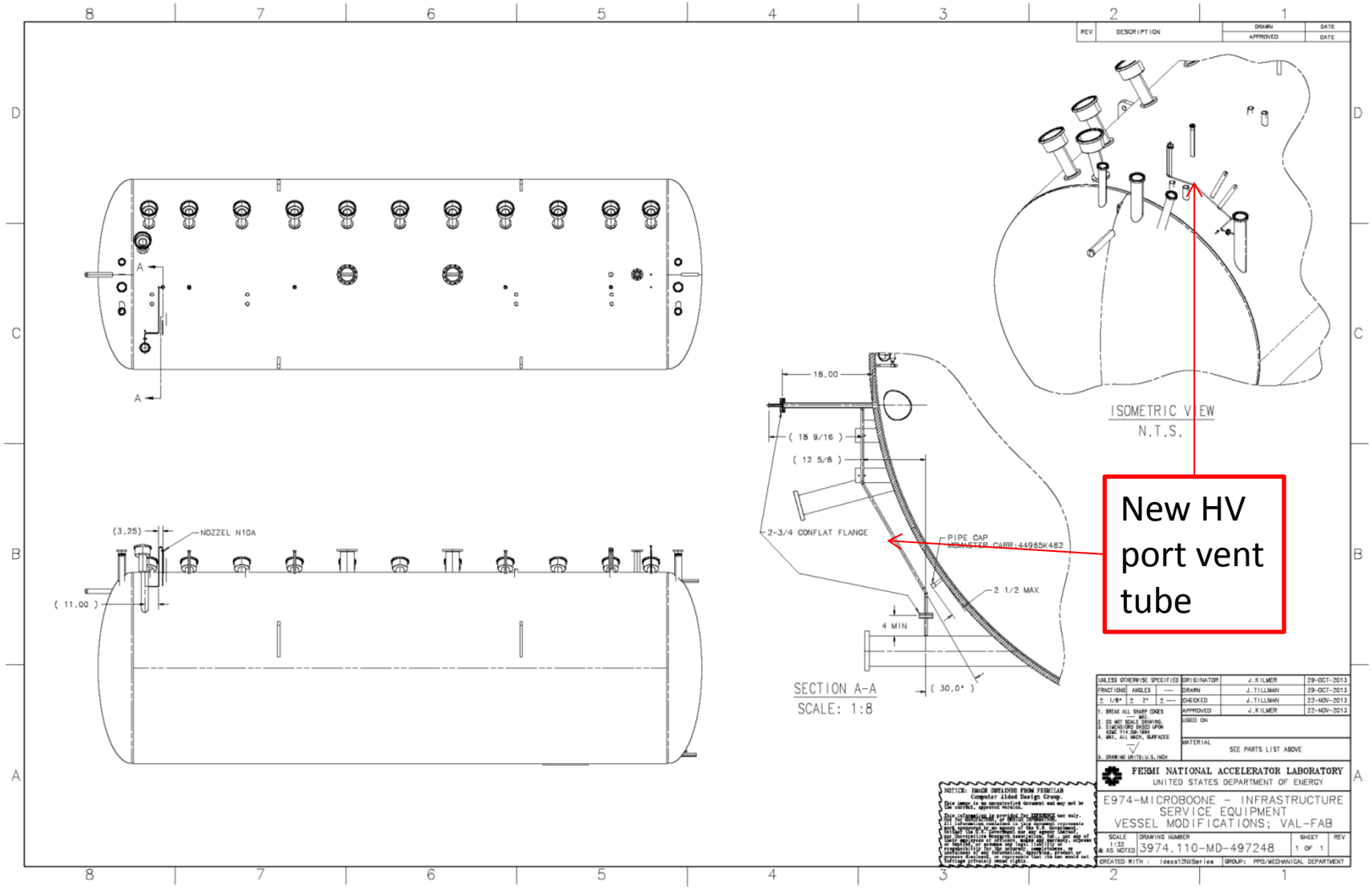
ISOMETRIC VIEW
N.T.S.
New HV port vent tube
SECTION A-A
SCALE: 1:8
18.00
(18 9/16)
(12 5/8)
2-3/4 CONFLAT FLANGE
PIPE CAP
2 1/2 MAX
4 MIN
(30.0°)
(3.25)
NOZZEL N10A
(11.00)
A
FERMI NATIONAL ACCELERATOR LABORATORY
UNITED STATES DEPARTMENT OF ENERGY
E974-MICROBOONE - INFRASTRUCTURE SERVICE EQUIPMENT
VESSEL MODIFICATIONS; VAL-FAB
3974.110-MD-497248
SEE PARTS LIST ABOVE
J.KILMER 29-OCT-2013
J.TILLMAN 29-OCT-2013
J.TILLMAN 22-NOV-2013
J.KILMER 22-NOV-2013

Weld on the head

- Add 24 grounding points on the head to minimize the current path from the torch to the ground lug – keeps stray currents out of the electronics
- Add cable hangers to route TPC thermometer wires out of the vessel
- Final weld has a full backing ring to protect detectors and eliminate the need for a purge

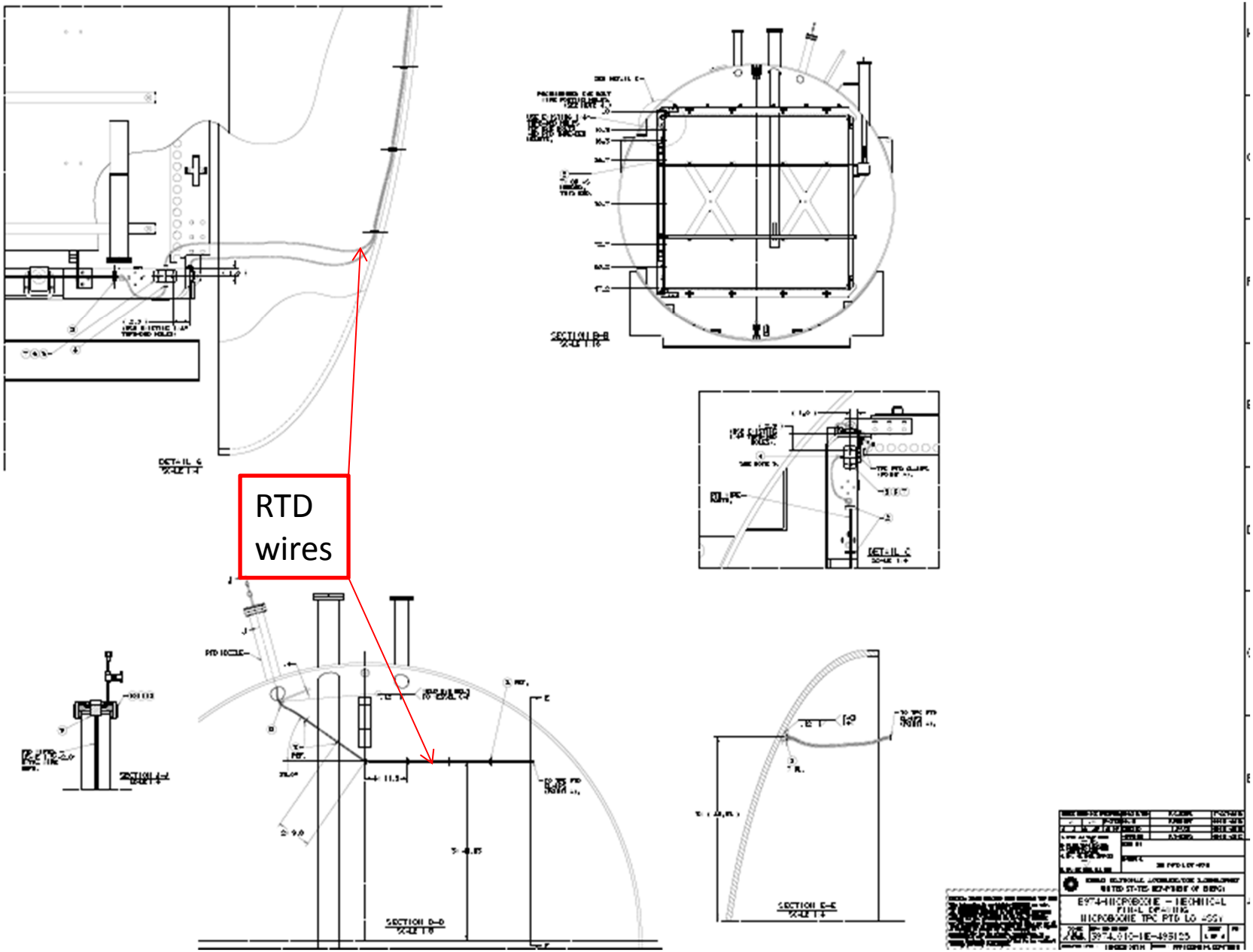
RTD
wires

REV	DESCRIPTION	DRAWN	DATE
		APPROVED	DATE
A	REMOVED VESSEL CYL. SIDE GROUND BLOCKS	R. REINERT	17-DEC-2012
		J. KILMER	17-DEC-2012

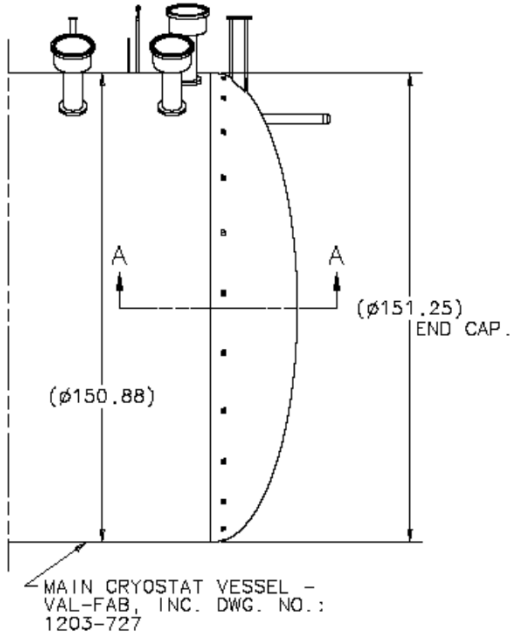

SIDE VIEW
CRYOSTAT VESSEL-
REMOVABLE END

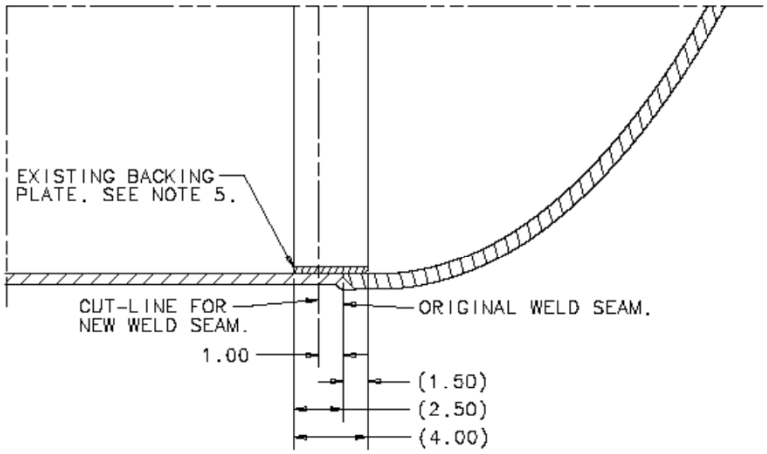

SECTION A-A
REMOVABLE END CAP
WELDMENT
SCALE 1:4

NOTES: (UNLESS OTHERWISE SPECIFIED):

1. PART TO BE FREE OF ALL SHARP EDGES, CORNERS, AND BURRS.
2. WELDMENT MUST BE FREE OF DIRT, GREASE, OIL AND CHIPS. SEE "MICROBOONE COMPONENT CLEANING PROCEDURE" - DOC. DB#2141.
3. ALL WELDS TO BE VACUUM LEAK TIGHT. ALL WELDS WILL BE PRESSURE TESTED TO 110% OF OPERATING PRESSURE AND THEN VACUUM LEAK CHECKED WITH A HELIUM MASS SPECTROMETER. THERE SHALL BE NO LEAK DETECTABLE GREATER THAN 1E-7 TORR-LITER/SEC.
4. ALL WELDS AS PER ASME SECTION VIII.
5. A NEW BACKING PLATE IS REQUIRED IF OLD BACKING PLATE IS UNUSEABLE.

NOTICE: IMAGE OBTAINED FROM FERMILAB
Computer Aided Design Group.
This image is an uncontrolled document and may not be the current, approved version.
This information is provided for reference use only. Not for manufacture or design information. All information contained in this document represents data generated by an agency of the U.S. Government. Neither the U.S. Government nor any Agency thereof, nor Universities Research Association, Inc., nor any of their employees or affiliates makes any warranty, express or implied, or assumes any legal liability or responsibility for the accuracy, completeness or usefulness of any information, apparatus, product or process disclosed, or represents that its use would not infringe privately owned rights.

UNLESS OTHERWISE SPECIFIED			ORIGINATOR	J.KILMER	15-OCT-2012
.XX	.XXX	ANGLES	DRAWN	R.REINERT	18-OCT-2012
± .03	± —	± —	CHECKED	J.RAUCH	16-OCT-2012
1. BREAK ALL SHARP EDGES — MAX.			APPROVED	J.KILMER	16-OCT-2012
2. DO NOT SCALE DRAWING. 3. DIMENSIONS BASED UPON ASME Y14.5M-1994. 4. MAX. ALL MACH. SURFACES 250			USED ON VAL-FAB, INC. DWG. NO.: 1203-727		
5. DRAWING UNITS: U.S. INCH			MATERIAL		

FERMI NATIONAL ACCELERATOR LABORATORY
UNITED STATES DEPARTMENT OF ENERGY

E974-MICROBOONE - CRYOGENICS
CRYOSTAT
VESSEL REMOVABLE END WLDMTS

SCALE	DRAWING NUMBER	SHEET	REV
1:32 & AS NOTED.	3974.200-MB-493050	1 OF 1	A

CREATED WITH : Ideas12NXSeries | GROUP: PPD/MECHANICAL DEPARTMENT