# Default Setup for Bo VST

Ben Jones, MIT

August 13, 2012

**Abstract**

This document details the default setup for the Bo VST. The default configuration of the HV supply, LEDs, pulser board, NIM logic, local server login and level monitor are all described. Where the defaults are likely to change in the near future, this is indicated in the text. After any specialized run, the system should be returned to this configuration.

## Contents

**1 Bo Subsystems** **2**

**2 Optical Assemblies** **2**

**3 High Voltage and Splitters** **2**

**4 Server** **3**

**5 LED and Pulser Board** **3**

5.1 Internal Fibers . . . . . 4

5.2 LEDs . . . . . 4

5.3 Pulser Board . . . . . 4

5.4 LED to Fiber Configuration . . . . . 5

**6 Cosmic Paddles** **6**

**7 NIM Crate** **7**

**8 Level and Purity Monitoring** **8**

**9 Default Running Modes** **9**

# 1 Bo Subsystems

This document describes the default configuration of each subsystem of the vertical slice test. Some components exist in more than one subsystem, and hence the relevant aspects are described in separate sections. Figure 1 shows a cartoon schematic of the subsystems described in this note and the connections between them.

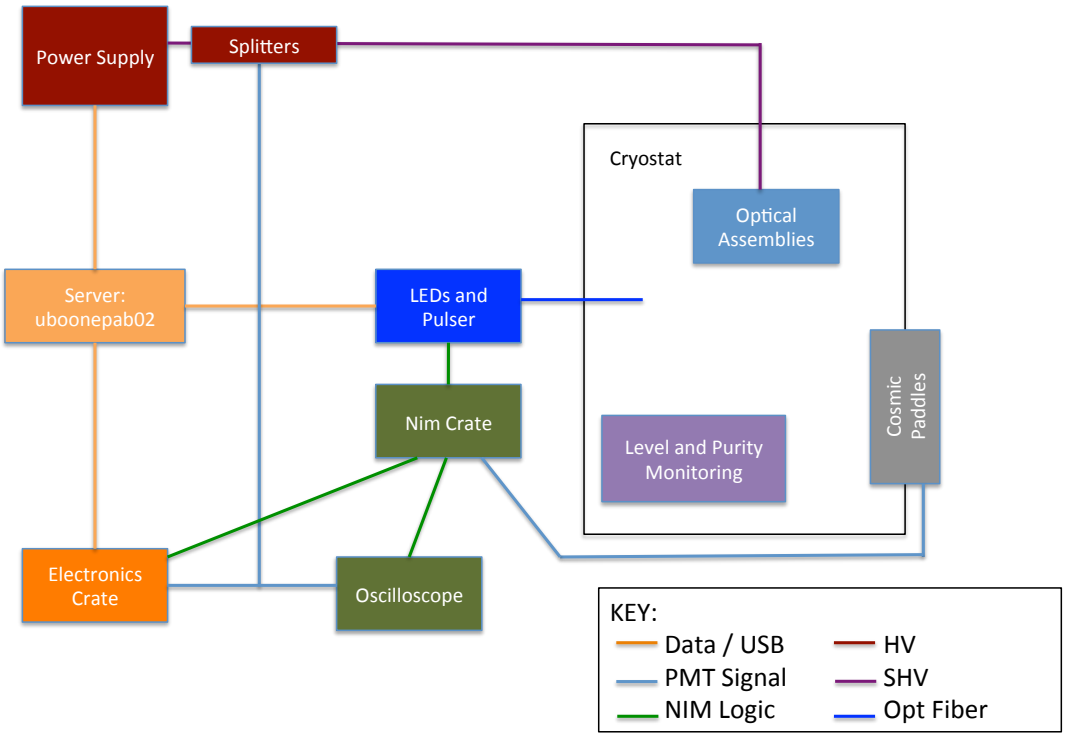


Figure 1: Cartoon of the Bo VST subsystems showing interconnections

# 2 Optical Assemblies

Bo currently contains MicroBooNE PMTs 11 (top) and 16 (bottom). PMTs have bases attached and are connected to SHV cables via two pins, earth (cable shielding) and SHV (core). The cable is tied to the PMT assembly frame to prevent it from dislodging during fills, etc. The two SHV cables run to a four channel feedthrough in the Bo lid and are connected on the underside to diagonally opposite channels labelled 1 (upper PMT) and 2 (lower PMT). On the top side of the lid, each channel has an SHV connector. Identical 90Ohm cables labelled 1 and 2 run from each channel to the relevant splitter.

The signal is split from each SHV cable using a splitter box, described in the subsequent section. Each signal is then sent to both an oscilloscope and the electronics rack. The splitting is performed with a T which is positioned near the scope. The oscilloscope channels are each 50Ohm terminated, and if at any time the signal cable is removed from the scope (which must only be done when the high voltage is off), it will be terminated with a 50Ohm impedance to maintain the same signal size at the electronics crate. The electronics signal inputs have an impedance of 100Ohms and visible reflections have been observed from this mismatch. We are presently investigating alternative termination schemes in order to minimize these effects.

Each PMT has a MicroBooNE style TPB plate, with 3 coats of a mixture of TPB and polystyrene, brush coated in a toluene based solution. The current plates were made by Christina Ignarra and Christie Chiu, who will make the final MicroBooNE plates, and use TPB from the same batch as the already purchased MicroBooNE supply.

# 3 High Voltage and Splitters

The high voltage system is controlled by via GUI interface on uboonepab02. To bring up this interface, log in as uboonedaq and run the following commands:

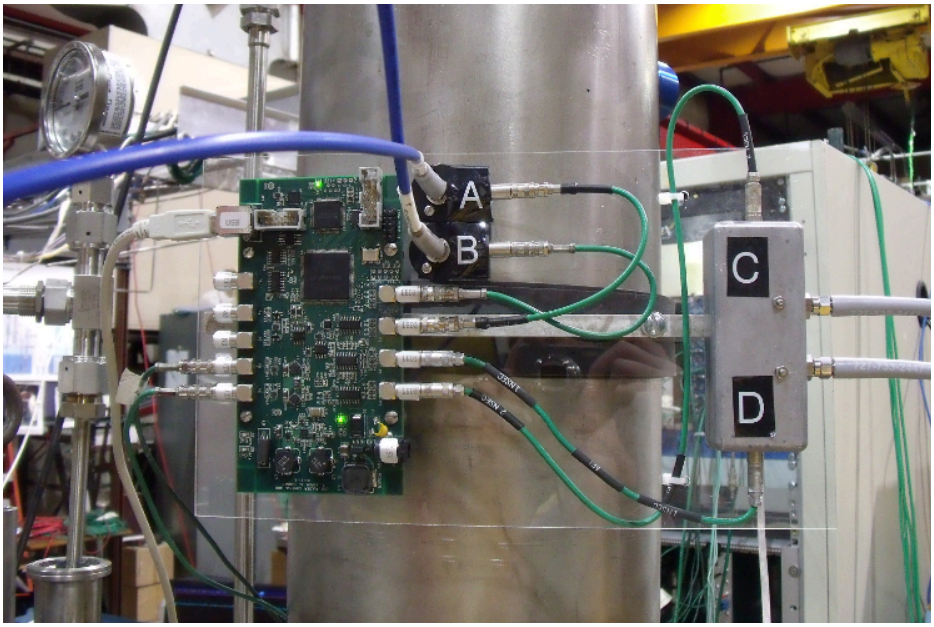


Figure 2: LED and pulser board mounting on condenser tower

```
. /uboone/setup
setup epics_css v3_1_0.FNAL01
cssgui.server start
```

To switch on high voltage, type the desired voltage into the "Target Value" box for the relevant channel. Then using the drop-down status box for that channel, choose "On" followed by "Ramp". The voltage will ramp up, and the current value of the voltage and current drawn are shown in real time.

There are four splitters installed in the high voltage crate. Splitters numbered 1,2,3 are identical, with only default signal attenuation, and 4 is modified to have 1 and 1/10 gain high-low outputs. By default, high voltage channel 1 connects to splitter 1 and PMT assembly 1 (top), and high voltage channel 2 connects to splitter 2 and PMT assembly 2 (bottom). The default voltages for both channels are 1200V, with current limit 800mA. Once the 1PE calibration has been achieved, the default voltages will be changed such that a one PE peak gives a recorded signal of 20ADC counts.

# 4 Server

The server is a MicroBooNE server with address uboonepab02.fnal.gov. By default, the user uboonedaq is logged in locally. Code for pulser control, electronics readout and HV control is runnable from the home directory of user uboonedaq. Eric Church can allow users with Fermilab kerberos credentials to log in as uboonedaq over kerberized ssh on request. Details for configuring each of the relevant systems from the server are given in subsequent sections.

By default the monitor, mouse and keyboard on top of the half-size high voltage rack are connected to uboonepab02 and can be used to adjust voltage and pulser settings in situ. At the present time, running of electronics code requires sudo access. The current scheme is to run this code using login over kerberized ssh to the uboonedaq account by an authorized user who has root privileges on uboonepab02.

# 5 LED and Pulser Board

The LEDs and pulser board are mounted on a backboard fixed to the Bo condenser tower. This board is shown in figure 2. Each LED can be connected to a fiber feedthrough in the cryostat lid which leads to an internal optical fiber.

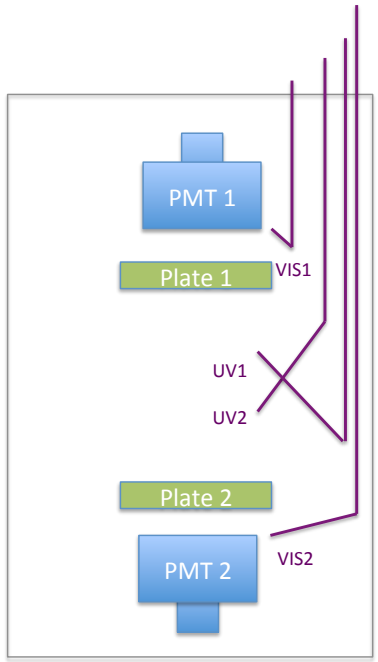


Figure 3: Fiber map inside Bo

### 5.1 Internal Fibers

There are four fiber feedthroughs in the Bo lid, labelled "UV1, UV2, VIS1, VIS2", each of which connects to a fiber inside the cryostat. The two VIS fibers point directly at the face of each PMT, and the two UV fibers point at the TPB coated plate of the relevant PMT from above. These is shown diagrammatically in figure 3. Each feed-though has an optical coupling to which any of four external optical fibers can be connected. Before connection, a pressurized gas duster is always used to clean the coupling to prevent dust affecting light visibility. The four external fibers each run to an LED, which attached via another optical coupling, such that any of the four LEDs (A,B,C,D) can be connected to any of the four fibers.

### 5.2 LEDs

Presently there are only 3 operational LEDs in the system, labelled A,B,C, with A and B being visible, C being ultraviolet. A fourth ultraviolet LED, D, will be added soon. All LEDs are mounted on "postage stamp" boards which accept a lemo connection, and are driven with a negative voltage on the LEMO cable. The ultraviolet LEDs have built in fiber couplings, and the visible LEDs have had similar fiber couplings made for them in house, such that any of the four fibers can be attached to any LED. Each LED has a different characteristic intensity curve as a function of voltage, and more details of these can be found in previous ADWG meetings and tech-notes.

### 5.3 Pulser Board

A USB controlled pulser board is used to deliver a specified pulse sequence to the LEDs. The pulser board has four outputs, labelled and accessed as 0,1,2,3. The default pulser to LED mapping 0=C, 1=D, 2=A, 3=B. The board produced two trigger outputs, corresponding to 0||1 and 2||3, which for the purposes of this study represent "visible" and "UV" triggers. Despite the fact that the trigger outputs are formed from ORs of pairs of LEDs, pulse sequences can specify pulsing of individual LEDs, though in our default sequences, 0,1 and 2,3 always pulse together in pairs. The voltage delivered to each channel is specified in the pulser configuration as a number between 0 and 4900, corresponding to a nonlinear voltage scale running between 0 and 16V.

Two pulse sequences are loaded onto uboonepab02, corresponding to approx. 1Hz and approx. 100Hz rate. In each sequence, a train of pulses is delivered for a few seconds, followed by a few seconds gap. The pulse train alternates between UV and visible pulses, with voltages 4000 supplied to the UV channels and 2500 to the visible channels. The pulse width is also specifiable, and by default the width of the UV pulses is 2ns and the width of the visible pulses is 1ns. To run either sequence

```
As user uboonedaq:
cd ~uboonedaq/Pulser
./Pulse1Hz.sh
or
./Pulse100Hz.sh
```

This will configure the pulser board and bring up a PUTTY window for further interactive control. The sequence will continue even after PUTTY is closed. To stop the pulser, one can either type "RE" into PUTTY, or disconnect and reconnect the USB cable at the server. To change from one pulse sequence to the other, the pulser should be reset in between to prevent unpredictable behavior. To load a PUTTY window for interactive control, either after the default window has been closed or to control the pulser independently of the two preloaded pulse sequences, run the command

```
putty -load Pulser
```

The Pulser putty profile specifies the relevant baud rate and communication parameters for controlling the board interactively via text input. Note that commands should always be typed into the putty dialog box, even though when a default pulse sequence has been loaded they will appear in another terminal window rather than in the putty box itself. This slightly counterintuitive behavior may be remedied later with the introduction of a pulser GUI which is under development by Thomas Wester at PAB, but not yet ready for deployment in our system.

Some common pulser commands are given below:

| **Command** | **Function** |
|---|---|
| RE | Reset the pulser and clear any pulse sequences |
| WD [channel] [voltage] | Set pulse height at channel = {0, 3} to voltage = {0, 4900} |
| WB 12 [w0][w1] | Set channel 0,1 pulse widths to w0={0,F} and w1= {0,F} nanoseconds |
| WB 13 [w2][w3] | Set channel 2,3 pulse widths to w2={0,F} and w3={0,F} nanoseconds |
| S1 | Single pulse on all channels with specified parameters |

## 5.4 LED to Fiber Configuration

At present, one UV LED is missing, so we use a slightly different LED to channel scheme than the final version. Both are given here. In the three LED scheme, visible LEDs A and B are connected to VIS1 and VIS2 respectively, and UV LED C is connected to UV2. In the final four LED scheme, A,B,C,D will be connected to VIS1, VIS2, UV1, UV2 respectively. The final four LED scheme is shown in figure 5, and the current three LED scheme in figure 4.

Final Configuration:

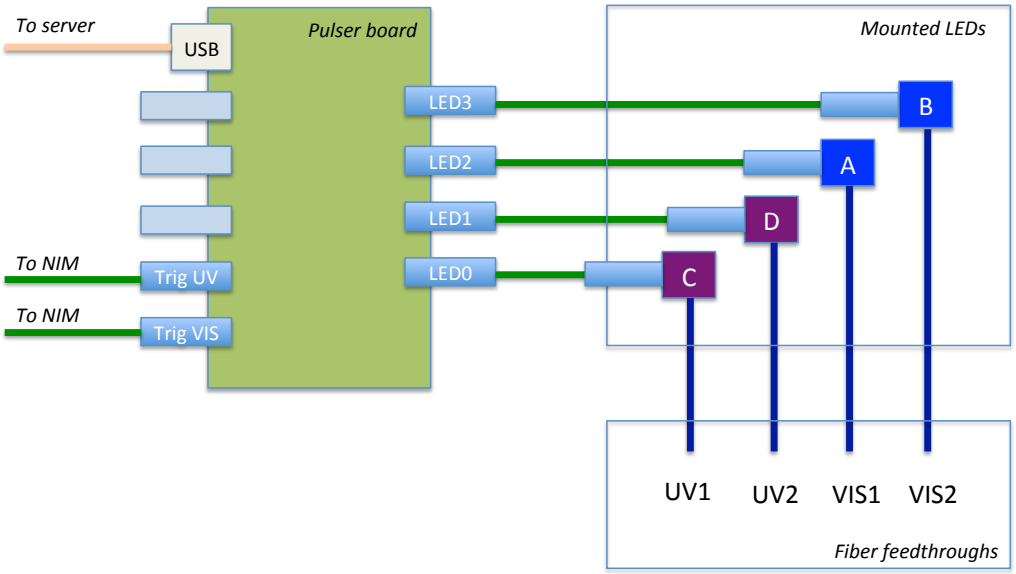


Figure 4: Pulser channel, LED and fiber mapping for the current three LED configuration

Current Default Configuration

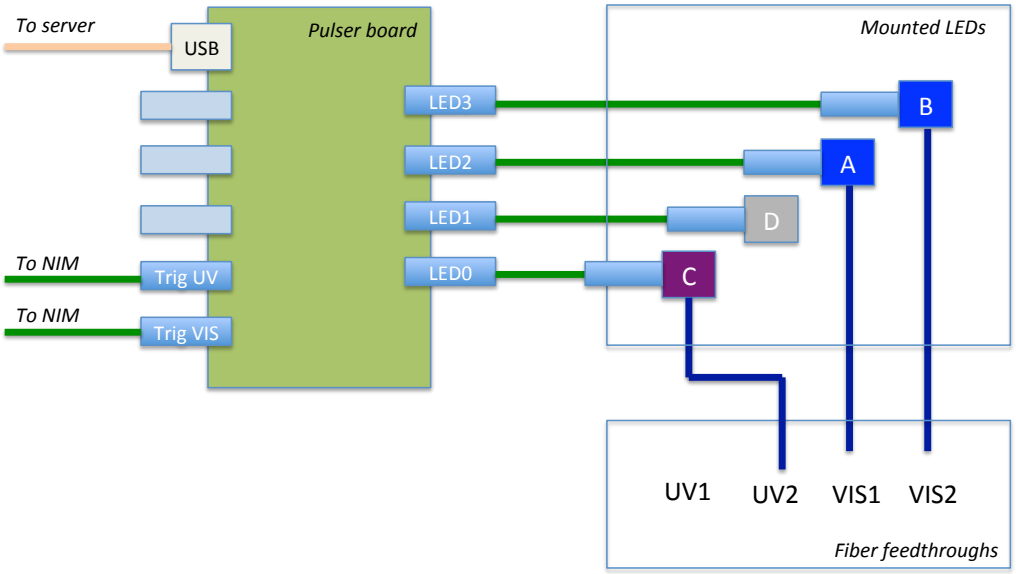


Figure 5: Pulser channel, LED and fiber mapping for the final four LED configuration

# 6 Cosmic Paddles

Bo is surrounded by two pairs of cosmic paddles which have an adjustable height and can be attached at any point around the radius of the cryostat. These are supplied with 12V by an independent power supply, and the

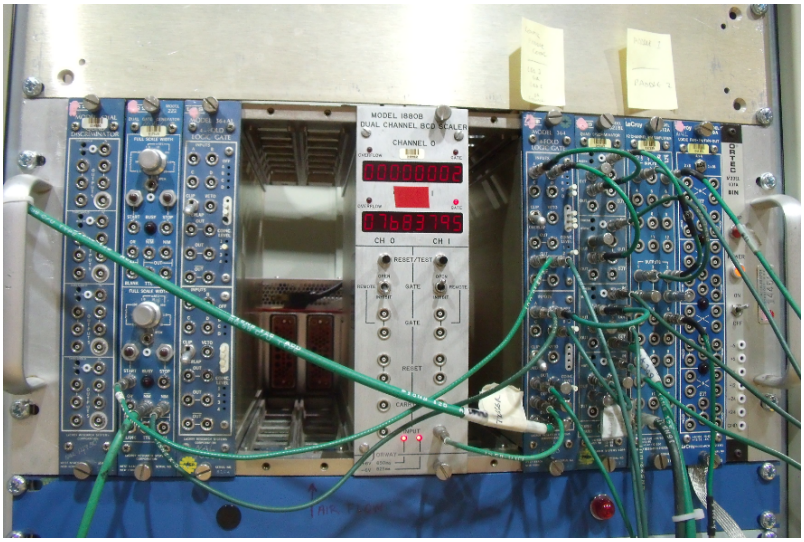


Figure 6: Photograph of default NIM crate configuration

voltage is stepped up by cockroft walton base on the relevant paddle PMTs. The system has a total of four possible paddles, but at present only two are used, one on each side of Bo. We find that even with two paddles, the random coincidence rate is negligible.

The PMT signal from each paddle is fed to a discriminator and then a coincidence is used to provide a cosmic ray trigger. The paddles are arranged such that cosmics passing through both paddles do not pass through either PMT. The triggered cosmic rate is $O(0.01Hz)$.

# 7 NIM Crate

The NIM crate configuration is shown as a photograph in figure and schematically in figure 7. PMT signals from the cosmic paddles are discriminated and put in coincidence to provide a cosmic trigger. Since these PMTs often give many after pulses, and hence one cosmic can commonly produce many coincidence counts, the coincidence signal is fed into a gate generator which produces a gate of width around_100ns. This ensures that each cosmic only produces a single trigger pulse. LED trigger signals are also sent through discriminators to provide standard NIM logic pulses. The logical OR of these three triggers is used as an external trigger to the electronics trigger board.

Each NIM pulse is also fed to channels 2,3,4 of the readout board as a trigger flag. The signals are also sent to the scope, by convention always as NIM_BAR (positive) signals. Zero or more of these trigger flags may be connected to the scope at any time. Since the NIM_BAR channels are not directly connected to the NIM channels, connection at the scope should not affect the signal size provided to the electronics racks on any channels. The width and threshold of each discriminator has been adjusted to make sure that double pulsing does not occur. The UV LED channel has a wider trigger pulse than the visible LED channel : this was initially a result of tuning to remove double pulsing, but is also useful as an additional handle on which pulse is being observed when the logical OR of all signals is recorded at the oscilloscope.

A scaler is connected in parallel with the trigger board external trigger input which allows n independant counting of triggers by the NIM crate. This is useful for determining whether or not all triggers are being recorded by the readout system. The scaler count has been verified to be accurate for the 1Hz pulse sequence by comparing the number of pulses counted with a known number of pulse trains supplied.

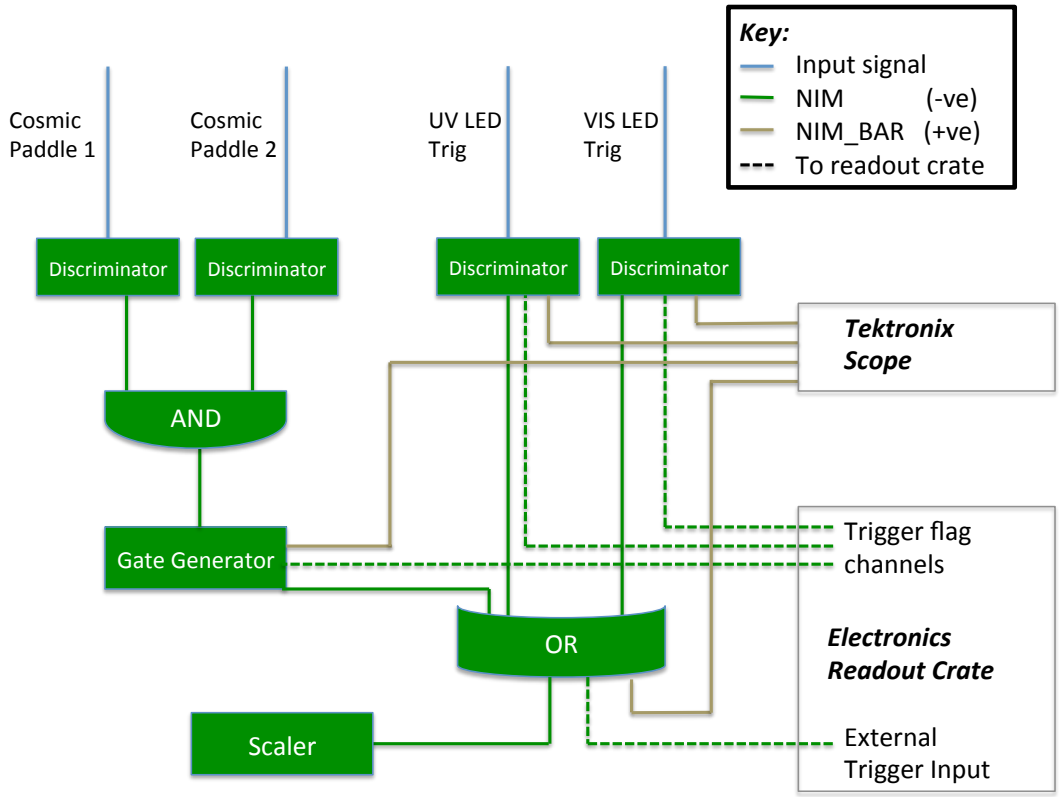


Figure 7: NIM crate configuration for Bo VST

# 8 Level and Purity Monitoring

Bo has a level monitor which is connected to a specialized level monitoring console. The monitor records argon levels between 0 and 36 inches from the cryostat lid (with a reading 0 meaning the argon is 36 inches from the lid, and 36 meaning the cryostat is full). Argon levels drop by between 4 and 7 inches per day.

The safe range of operation has been defined as 25 inches for both PMTs, or 6 inches for PMT 2 only. These levels are chosen by the requirement that the PMT base be safely submerged in the liquid. In the next iteration we hope to provide an interlock to shut off high voltage if the safe conditions are not met. However, even above the minimum safe level, it is possible that, for example, the TPB plate, or the path of triggered cosmic rays, may not be under the liquid.

| Component | Distance from Lid |
|---|---|
| PMT 1 Base | 9” |
| PMT 2 Base | 36 1/4” |
| Vis 1 Fiber | 17 5/8” |
| Vis 2 Fiber | 27 1/2” |
| UV 1 Fiber | 25 7/8” |
| UV 2 Fiber | 19 1/8” |

Table 1: Heights of various components in Bo

Bo also has a purity monitor, which has not yet been read out. Andzrej is interested in working on the purity readout in the coming weeks. There are also discussions ongoing about the possibility of gas sampling oxygen and nitrogen monitors. If these are installed, the timescale will be late 2012.

# 9 Default Running Modes

When argon levels are high enough, Bo will be left in the following default mode, with all settings as described in the above text:

**PMT 1 OFF**
**PMT 2 ON, 1200V**
**Default three LED configuration**
**Pulser running at 1Hz**

With PMT 1 only to be operated either when we are at PAB, or in special cases for overnight runs when we are returning to PAB the next morning (since this PMT should only be operated with argon levels 25-36 inches). Once an argon level to HV interlock has been implemented and the final UV LED replaced, we will move to the following default configuration. This transition is expected in the next two weeks.

**PMT 1 ON, 1200V**
**PMT 2 ON, 1200V**
**Default four LED configuration**
**Pulser running at 1Hz**